Body builder guidelines
Edition May 2016

Nutzfahrzeuge

Body builder guideline
The Crafter (from model year 2012)

List of modifications

Table of contents

*Electronic Stability Control

1 Introduction

These body builder guidelines provide body builders with important technical information which must be complied with when planning and manufacturing a body for road safety and operational reliability. The add-on, body, installation or conversion work required for this is referred to below as "body activities".

Due to the vast number of body builders and body types, it is not possible for Volkswagen AG to predict all possible changes, e.g. in driving properties, stability, weight distribution, centre of gravity of the vehicle and its handling characteristics which can occur due to the body activities. Therefore, Volkswagen AG does not accept any liability for accidents or injuries arising from changes of this kind made to its vehicles, especially if the changes have a negative effect on the vehicle as a whole. As a result, Volkswagen AG only accepts liability for its own design, production and instruction services. The body builder itself is obliged to ensure that its body activities are not faulty in themselves, and also that they cannot result in defects or dangers on the vehicle as a whole. The body builder itself bears the product liability in the event that this obligation is violated.

These body builder guidelines are intended for professional body builders. As a result, these body builder guidelines assume corresponding background knowledge. Note that some work (e.g. welding on load-bearing parts) is only allowed to be performed by appropriately qualified personnel. This requirement exists in order to avoid risks of injury and to achieve the quality needed in the body activities.

1.1 Concept of these guidelines

The following body builder guidelines are divided into 10 chapters so that you can find information rapidly:

1. Introduction
2. General information
3. Planning bodies
4. Technical limit values for planning
5. Prevention of damage
6. Electrical/electronic systems
7. Modifications to base vehicle
8. Implementations of bodies
9. Calculations
10. Technical details

For more information, see 2.1 “Product and vehicle information for body builders”, 2.2 “Body builder guidelines, consulting” and 2.10 “Delivery range”.
The index will also help you quickly find information.
The limit values selected in chapter 4 “Technical limit values for planning” shall be complied with without fail, and shall be used as the basis for planning.
Chapters 7 “Modifications to the base vehicle” and 8 “Implementations of bodies” are the basic chapters for the technical content of the body builder guidelines.

1.2 Means of representation

The following means of representation are used in these body builder guidelines:

Warning note

A danger note draws your attention to possible accident or injury risks to which you or other persons might be exposed.

Environmental note

An environmental note provides you with information about environmental protection.

Practical note

This note draws your attention to a possible risk of damage to the vehicle.

Information

This note indicates additional information.

Under this symbol you will find information about the supplied base vehicle (chassis, panel van and window van):

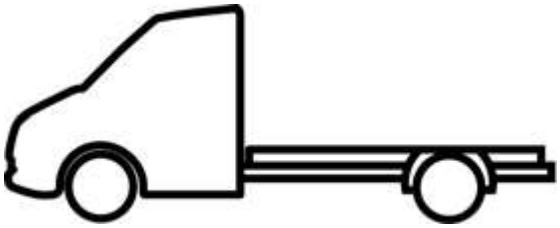

Under this symbol you will find information about the conversion or the assembly or mounting of the body by the body builder:

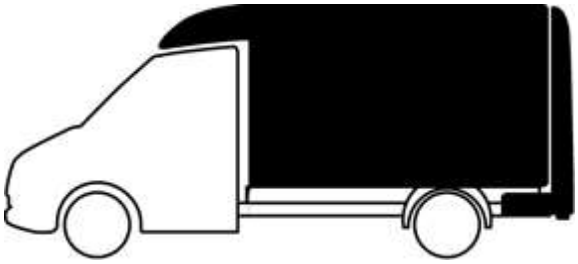

1.3 Vehicle safety

Warning note

Before installing external add-ons or mechanical units, it is essential that you read the chapters in these body builder guidelines that are related to installation, as well as corresponding chapters in the instructions and information for the suppliers' mechanical units and in the detailed owner's manual for the base vehicle. Otherwise you will not be able to recognise dangers, and might expose yourself or others to danger.

1.3.1 Notes on vehicle safety

We recommend that you use parts, mechanical units, conversion parts or accessories that have been tested by Volkswagen AG for the corresponding vehicle type.
Have the vehicle's safety checked immediately if non-recommended parts, mechanical units, conversion parts or accessories are used.

Practical note

It is essential to comply with national registration regulations because body activities on the vehicle can alter the vehicle type under registration regulations and the operating permit may be invalidated. This applies in particular to:

- modifications which change the vehicle type approved in the operating permit,
- modifications which might be expected to endanger road users or
- modifications which impair the exhaust or noise emissions characteristics.

1.4 Operational safety

Warning note

Incorrect interventions in electronic components and their software may result in these no longer functioning. Due to the networking of electronics, systems that were not modified can be affected.

Malfunctions to the electronics can significantly impair the operational safety of the vehicle.

Have work on or modifications to electronic components performed by a qualified specialist workshop which has the necessary specialist knowledge and tools for performing the necessary work.

Volkswagen AG recommends a Volkswagen AG customer service workshop for this purpose.

Service by a qualified specialist workshop is essential, in particular for safety-relevant work and work on safety-relevant systems.

Some safety systems only operate when the engine is running. Therefore, do not switch the engine off when driving.

1.5 Note on copyright

If you have any questions please contact:

Volkswagen Customer Support
Telephone: 0800-86-228-836

2 General information

The following pages contain technical guidelines for custom body builders and equipment fitters designing and mounting bodies. The body builder guidelines must be strictly adhered to when performing any modifications to the vehicle. The German version of the body builder guidelines is the exclusive authority for the most up-to-date information.
This also applies to legal claims.

2.1 Product and vehicle information for body builders

2.1.1 Contact in Germany

If you have questions about vehicle models from Volkswagen Commercial Vehicles, you can contact us on the Internet on the Conversion Portal of Volkswagen AG (www.umbauportal.de) using one of the following methods:

Free hotline (from a German landline):	0800-86228836
Contact (email):	info@umbauportal.de
Personal points of contact:	https://umbauportal.de/ansprechpartner
Contact form 1):	https://umbauportal.de/allgemeine-fragen

1) For registered users

After registering on the Conversion Portal, you also have the opportunity to take up contact directly with the commercial vehicle body builder support department using the contact form on the Conversion Portal. There you can store vehicle-specific information, which will help us to deal with your technical enquiry faster.

2.1.2 International contact

Please contact the body builder support personnel at the responsible importer for technical advice relating to Volkswagen Commercial Vehicles models and as a point of contact for conversions.
To find the point of contact who is responsible for you, please register on the “Bodybuilder Database” international portal of Volkswagen AG www.bb-database.com.

Help is available for the registration option using the “Help” menu.

Login information:	https://www.bb-database.com/de/hilfe#faq_7

2.1.3 Electronic Repair and Workshop Information from Volkswagen AG (erWin*)

Body builders can access repair and workshop information, e.g.

- Circuit diagrams
- Repair manuals
- Maintenance
- Self-study programmes

via the Electronic Repair and Workshop Information from Volkswagen AG (erWin*):
http://erwin.volkswagen.de/erwin/showHome.do

* Information system from Volkswagen AG, subject to payment

2.1.4 Genuine parts online ordering portal*

For the purchase of spare parts and for the research of Volkswagen Genuine Parts, our latest parts catalogues are available on the Internet on the "Genuine Parts Online Ordering Portal":
www.partslink24.com

* Information system from Volkswagen AG, subject to payment

2.1.5 Online owner's manuals

The Volkswagen AG website contains a "Service & Accessories" menu which gives access to the digital owner's manual for your vehicle:
http://www.vwn-bordbuch.de

Once you have entered the vehicle identification number of your Volkswagen, you can see all the manuals associated with your vehicle.

2.1.6 European Type Approval (ETA) and EC Certificate of Conformity (CoC)

Directive 2007/46/EC of the European Parliament establishes the standard for the approval of motor vehicles and their trailers, and of systems, components and separate technical units intended for such vehicles.
In this directive, provisions for the approval of vehicles which are produced in several stages were also adopted: the multi-stage approval process. Accordingly, each manufacturer involved in the construction of a vehicle is itself responsible for the approval of modified or added scopes in
its production stage. The manufacturer may choose one of the four following methods:

- EC type approval (ETA)
- EC type approval for small series
- National small series type approval
- Individual approval

CoC = Certificate of Conformity. A document that verifies the conformity of certain goods – thus also including vehicles and bodies – with the recognised (international) standards. The purpose of this EC Certificate of Conformity is to facilitate the approval of goods on international markets. As a result, the document is needed above all in import and export as part of the customs clearance procedure.
The manufacturer, who is the holder of an EC type approval or EC small series type approval, is required
to enclose a Certificate of Conformity with every vehicle conforming to an approved type.

If you are planning to apply multi-stage type approval, an agreement must concluded in accordance with 2007/46/EC Annex XVII Paragraph 1.1. Please get in touch with us for information on this matter. (see 2.1.1 "Contact in Germany" and 2.1.2 "International contact").

2.2 Body builder guidelines, consulting

The body builder guidelines include the technical requirements for body builders and equipment fitters designing and mounting bodies for base vehicles of the Volkswagen Commercial Vehicles brand.
The body builder guidelines must be strictly adhered to when performing any modifications to the vehicle.
Ensure that no modification adversely affects the functional reliability and safety of the running gear, the body or the electric system. Modifications must only be performed by qualified specialists and in accordance with the generally acknowledged rules of the automotive industry.
Prerequisites for modifications to used vehicles:
The vehicle shall be in a good overall condition, i.e. structural parts such as longitudinal and cross members, pillars etc. shall not be corroded to such an extent that structural stability might be adversely affected.
Vehicles whose modifications might affect the validity of the general certificate of roadworthiness must be presented to an authorised testing centre for approval. It is recommended to clarify in advance with the relevant authority whether approval is required.
When inquiring about planned modifications, please enclose two sets of design drawings of the complete scope of the modification, including weights, centre of gravity and dimensions, which also clearly show how the body is attached to the chassis. Please use the online contact form for this (see 2.1.1 "Contact in Germany" and 2.1.2 "International contact").
Please also provide information about the intended operating conditions of the vehicle. If bodies comply with the present body builder guidelines, no additional approval by Volkswagen AG is required for the presentation of the vehicle at the relevant authority examining roadworthiness.
The work safety regulations of the trade association and the EU Machinery Directive apply.
When making modifications to vehicles, all corresponding and applicable legal regulations, rules, laws and directives must be observed.

2.2.1 Safety certificate

Volkswagen AG does not issue body approvals for non-Volkswagen bodies. It merely provides body builders with important information and technical specifications for dealing with the product in these guidelines. As a result, Volkswagen AG recommends that all work should be carried out on the base vehicle and the body in accordance with the current Volkswagen body builder guidelines applicable to the vehicle in question.

Volkswagen AG does not recommend body activities which:

- are not conducted according to these Volkswagen body builder guidelines
- exceed the gross vehicle weight rating
- exceed the gross axle weight rating

Volkswagen AG issues safety certificates on a voluntary basis, as follows:
The assessment conducted by Volkswagen AG is exclusively based on the documents submitted by the body builder which is carrying out the modifications. The inspection and safety assessment only relate to the expressly designated scope of work, its basic compatibility with the designated chassis and its interfaces or, in the event of chassis modifications, the fundamental admissibility of the design for the designated chassis.
The safety certificate relates to the presented overall vehicle, and not to:

- the design of the overall body,
- its functions or
- the planned use.

Safety is only provided if the design, production and installation are carried out by the body builder performing the modifications in accordance with the state of the art and in accordance with the applicable body builder guidelines of Volkswagen AG – and assuming any deviations from these guidelines have been declared to be technically safe. The safety certificate does not release the body builder who is performing the modifications from its responsibility for the product, or from its obligation to carry out its own calculations, tests and a trial of the entire vehicle in order to ensure that the operational safety, road safety and driving properties of the overall vehicle it has manufactured are acceptable. Accordingly, it is necessary to ensure that the body builder exclusively accepts its responsibility for ensuring that its body activities are compatible with the base vehicle as well as the operational and road safety of the vehicle. It is expressly stated that the safety certificate from Volkswagen AG does not represent a technical approval for the investigated changes.

In the course of assessment of a presented vehicle, an assessment report is written as a means of obtaining a safety certificate (safety certificate report).

The following assessment results are possible:
- Classified as "safe"
  If the overall vehicle is classified as "safe", the Sales department can subsequently issue the safety certificate.
- Classified as "not safe"

Classification as "not safe" in the individual categories:
  + base vehicle configuration
  + impairment of the base vehicle and possibly
  + sole body item

leads to a corresponding classification of the overall vehicle. This means no safety certificate can be issued initially.
In order for a not-safe classification to be resolved, the safety certificate report states the necessary change for each item in question. In order for the safety certificate to be obtained, these points will have to be addressed by the body builder and documented in a clearly comprehensible manner in a report along the same lines as the safety certificate report. On the basis of this detailed report, it is possible for the desk-review assessment to be completed with a positive result.
Depending on the defective points, it may be necessary not only to provide documentation of the defect resolution but also for the vehicle from the first inspection to be presented again. The first report indicates if it will be necessary for a new assessment to be carried out on the vehicle.

The assessment report may also contain "notes/recommendations".
Notes/recommendations are technical remarks which do not have any effect on the final result of a safety certificate. They should be construed as advice and suggestions for further consideration, as a means of continuously improving the final product for the customer.

In addition, "notes/recommendations solely relating to the conversion" can also be formulated. The notes and recommendations stated as "solely relating to the body/conversion" must be dealt with and documented before the vehicle can be included in the body builder portal.

Practical note

Country-specific laws, directives and approval regulations shall be observed!

2.2.2 Application for the safety certificate

In order for the evaluation to be carried out for the safety certificate, the following documents and drawings shall be submitted to the responsible department before the start of work on the vehicle (see 2.1 "Product and vehicle information for body builders"):

- All deviations from these Volkswagen body builder guidelines.
- All data about dimensions, weight and centre of gravity (weighing certificates).
- Attachment of the body on the vehicle.
- Application conditions of the vehicle, e.g.:
  - on rough roads
  - in very dusty conditions
  - at high altitudes
  - at extreme outdoor temperatures
- Certificates (e-registration, seat tensile test).

Complete documentation avoids the need for clarification queries, and makes the processing faster.

2.2.3 Legal entitlements

- There is no legal entitlement for a safety certificate to be issued.
- Due to ongoing technical development and the information derived from this, Volkswagen AG is entitled to refuse a safety certificate even if a comparable certificate had been issued formerly.
- The safety certificate can be restricted to individual vehicles.
- The subsequent issue of a safety certificate may be refused for vehicles that have already been completed or delivered.
- The body builder is solely responsible for:
  - the function and compatibility of its body activities with the base vehicle.
  - road safety and operational reliability.
  - all body activities and installed parts.

2.3 Warranty and product liability of the body builder

The body builder's or fitter's warranty conditions apply to the body builder's or fitter's scope of supply. Therefore, warranty claims associated with complaints to this scope of supply cannot be made under the warranty conditions applicable to Volkswagen Commercial Vehicles.
Volkswagen vehicles delivered after 01/01/2005 are covered by a 2-year warranty without mileage limitation for the flawless condition of the product (Volkswagen warranty). From model year 2012, the new Crafter is covered by a 3-year warranty.
Defects of bodies, installations and conversions provided by third parties as well as defects of the vehicle caused by the said bodies, installations or conversions are excluded from the Volkswagen warranty and also from the Volkswagen paint and body warranty. This also applies to accessories which were not installed and/or supplied by the vehicle manufacturer.
The body builder or fitter is solely responsible for the design and assembly of bodies and the execution of conversions.
All conversions must be documented by the body builder or fitter in the service schedule. This service schedule is provided with every Volkswagen vehicle.
Due to the multitude of conversions and diversity of operating conditions, the information provided by Volkswagen AG is subject to the reservation that modified vehicles are not tested by Volkswagen AG. Modifications may affect the properties of the vehicle.
For reasons of liability, the body builders or fitters shall provide the following information in writing to their customers:
"Due to the modifications* to your Volkswagen Commercial Vehicles base vehicle, the properties of your base vehicle may have changed. Please understand that Volkswagen AG does not assume any liability for any negative effects resulting from the modifications* to the vehicle."

In individual cases, Volkswagen AG reserves the right to demand evidence of the information being passed on to the customer.
No general legal entitlement for the approval of a body modification exists, even if such approval was previously granted.
If bodies comply with the present guidelines, no additional approval by Volkswagen AG is required for the presentation of the vehicle at the relevant authority examining roadworthiness.

* At this point, the term "modification" may be substituted by a more precise description of the work performed, e.g. by "camping equipment installation", "wheelbase extension", "box body".

2.4 Ensuring traceability

Body dangers only detected after delivery can mean that subsequent measures in the market will be necessary (customer information, warning, call-back). To make these measures as efficient as possible, it is necessary to be able to trace the product after delivery. For this purpose, and in order to be able to use the central vehicle register (CVR) operated by the Federal Motor Transport Authority or comparable registers abroad in order to trace the affected vehicle owners, we strongly recommend that body builders should store the serial number/identification number of their body linked to the vehicle identification number of the base vehicle in their databases. Also, it is recommended for the customers' addresses to be stored and to provide a means for subsequent owners to be registered.

2.5 Trademarks

VW badges and VW emblems are trademarks of Volkswagen AG.
VW badges and VW emblems are not allowed to be removed without authorisation, or to be attached in a different location.

2.5.1 Positions on rear of the vehicle

VW badges and VW emblems which are also supplied shall be fitted in the location intended by Volkswagen.

2.5.2 Appearance of overall vehicle

If the vehicle does not correspond to the appearance and the quality requirements set by Volkswagen AG, then Volkswagen AG reserves the right to request removal of the Volkswagen AG trademarks.

2.5.3 Non-Volkswagen trademarks

Non-Volkswagen trademarks are not allowed to be attached next to Volkswagen badges.

2.6 Recommendations for vehicle storage

Extended storage times cannot always be avoided. The following measures are recommended to ensure that vehicle quality is not affected by long-term storage:

At vehicle delivery:
- Fill tank.
- Do not park the vehicle under trees, poles, etc.
- Open all ventilation flaps, set blower to maximum speed.
- Disconnect battery(ies).
- Remove dirt, snow and moisture from vehicle (footwell).
- Close windows, doors, front lid, rear lid and sunroof.
- Put manual gearbox into 1st gear or lever of automatic gearbox into park position. Do not engage reverse gear. Do not apply the parking brake.
- Pull off windscreen wiper bags and clamp polystyrene block under the wiper arm. Please remove any other loose film. ("Aero wipers": detach and store in suitable location inside vehicle.)
- Check tyre pressures, if necessary, increase to 4.5 bar for commercial vehicles.

Check vehicles weekly for contamination by aggressive media (e.g. bird droppings, industrial dusts) and clean, if required.
Check battery open-circuit voltage every 3 months, even if the battery is disconnected. Open-circuit voltage means the voltage of the disconnected battery after a minimum storage period of 12 hours. Recharge battery in due time before it reaches an open-circuit voltage of 12.4 V. Batteries with an open-circuit voltage of less than 11.6 V are in state of exhaustive discharge and should be disposed of without delay.
When recharging the battery only current-controlled and voltage-limited chargers must be used. A maximum charging voltage of 14.4 V shall not be exceeded.
It is recommended to check the tyre inflation pressure every three months and to increase it to 4.5 bars for commercial vehicles, if required. Reconnect battery negative lead(s) before recommissioning the vehicle.

2.7 Compliance with environmental rules and regulations

Environmental note

The following principles of environmentally friendly design and material selection should be followed right from the planning stage of fitted components or bodies, including with regard to the statutory requirements in the EU Directive on End-of-Life Vehicles 2000/53/EC.

Fitters of accessories and body builders shall ensure that they comply with all applicable environmental rules and regulations, especially EU directive 2000/53/EC concerning end-of-life vehicles and EU directive 2003/11/EC relating to restrictions on the marketing and use of certain dangerous substances and preparations ("low flammability" and certain flame-retardant agents) for closer definition of directive 76/769/EEC).
The registered keeper must keep all assembly documentation concerning the modification and hand them over together with the vehicle to the dismantler. This ensures that modified vehicles are processed in compliance with environmental rules and regulations at the end of their lifecycle.
Materials which represent a potential risk such as halogen additives, heavy metals, asbestos, CFCs and chlorinated hydrocarbons shall be avoided.

- EU directive 2000/53/EC must be adhered to.
- Preferably, materials which allow valuable substance recycling and closed material cycles shall be used.
- The material and production process shall be selected so that only low amounts of easily recyclable waste are generated.
- Plastics shall only be used where these offer advantages in terms of cost, function or weight.
- In the case of plastics, especially composite materials, only mutually compatible substances from one material family are allowed to be used.
- With regard to components that are relevant for recycling, the number of plastic types used shall be kept as low as possible.
- It is necessary to check whether a component can be manufactured from recycled material or with recycled additives.
- Care shall be taken to ensure that recyclable components can be removed easily, e.g. by means of snap-lock connections, predetermined breaking points, good accessibility, use of standard tools.
- Simple, environmentally friendly removal of the fluids shall be ensured by means of drain plugs, etc.
- Wherever possible, the components shall not be painted or coated; instead, dyed plastic parts shall be used.
- Components in areas at risk of accident shall be designed to be tolerant of damage, repairable and easy to exchange.
- All plastic parts shall be identified according to the VDA material sheet 260 ("Components of motor vehicles; Identification of materials"), e.g. "PP-GF30R".

2.8 Recommendations for inspection, maintenance and repair

Maintenance instructions or service schedules outlining inspection and servicing work should be provided for the modifications performed by the body builder or accessories fitter. These instructions or schedules must include the maintenance and inspection intervals as well as the required operating fluids and materials and the spare parts. It is also important to explicitly state the parts and components with a limited service life which must be checked in regular intervals to ensure service reliability and timely replacement.

This should be supported by a repair manual including tightening torques, settings and tolerances as well as other relevant specifications. Special tools, including their source of supply, must also be stated.

The manual shall also state which type of work has to be performed only by the body builders and accessories fitters or their authorised workshops.

If the body builder's or accessory fitter's scope of supply includes electric, electronic or mechatronic, hydraulic or pneumatic systems, current flow diagrams and diagnosis routines or similar documentation facilitating a systematic search for faults shall also be provided.

2.9 Accident prevention

Body builders shall ensure that the bodies comply with applicable legal rules and regulations as well as all regulations regarding work safety and accident prevention. All safety rules and the information material provided by accident insurance providers shall be observed.
All technically feasible measures must be taken to prevent unsafe operation.
Country-specific laws, directives and approval regulations must be observed.
The body builder is responsible for the compliance with these laws, rules and regulations.
For further information about commercial freight traffic in the Federal Republic of Germany please contact:

Contact data	
Telephone:	+49 (0) 40 39 80 -0
Fax:	+49 (0) 40 39 80-19 99
Email:	info@bgf.de
Postal address:	Berufsgenossenschaft für Fahrzeughaltungen, Fachausschuss "Verkehr", Sachgebiet "Fahrzeuge" Ottenser Hauptstrasse 54 D–22765 Hamburg
Homepage:	www.bgf.de

2.10 Delivery range

The vehicle drawings shown here are symbolic representations. The vehicle drawings are not to scale.

		Passenger cars	
Model / gross vehicle weight rating [kg]	**Wheel-base [mm]**	**Window van with normal roof Payload[1] [kg]**	**Window van with high roof Payload[1] [kg]**
Crafter 30/3190 for passenger car 3000 for goods vehicle	3250	1214 - 451 	
	3665	1185 - 451 	1149 - 451 

[1] The payloads listed here for the Crafter models apply to vehicles with manual gearbox. The payload of vehicles with Shiftmatic (for 80 kW and 100 kW) is reduced by 6 kg respectively.

		Passenger cars	
Model / gross vehicle weight rating [kg]	**Wheelbase [mm]**	**Window van with normal roof payload [1] [kg]**	**Window van with high roof payload[1] [kg]**
Crafter 35/ 3500	3250	1524 - 717 	
	3665	1472 – 699 	1436 - 685 
	4325		1281 - 685 

[1] The payloads listed here for the Crafter models apply to vehicles with manual gearbox. The payload of vehicles with Shiftmatic (for 80 kW and 100 kW) is reduced by 6 kg respectively.

		Trucks		
Model / gross vehicle weight rating [kg]	**Wheel-base [mm]**	**Panel van with normal roof payload[1] [kg]**	**Panel van with high roof payload[1] [kg]**	**Panel van with super-high roof payload[1] [kg]**
Crafter 30/ 3190 for passenger car 3000 for goods vehicle	3250	1096 - 681 		
	3665	1028 - 681 	992 - 681 	

[1] The payloads listed here for the Crafter models apply to vehicles with manual gearbox. The payload of vehicles with Shiftmatic (for 80 kW and 100 kW) is reduced by 6 kg respectively.

		Trucks		
Model / gross vehicle weight rat-ing [kg]	**Wheel-base [mm]**	**Panel van with normal roof payload[1] [kg]**	**Panel van with high roof Payload[1] [kg]**	**Panel van with super-high roof payload[1] [kg]**
Crafter 35/ 3,500	3250	1583 - 1015 		
	3665	1515 - 926 	1479 - 890 	1443 - 854 
	4325		1,345 -728 	1318 – 701 
	4325 with over-hang		1,293–681 	1,265 -681 

[1] The payloads listed here for the Crafter models apply to vehicles with manual gearbox. The payload of vehicles with Shiftmatic (for 80 kW and 100 kW) is reduced by 6 kg respectively.

		Trucks		
Model / gross vehicle weight rating [kg]	**Wheel-base [mm]**	**Panel van with normal roof payload[1] [kg]**	**Panel van with high roof payload[1] [kg]**	**Panel van with super-high roof payload[1] [kg]**
Crafter 50[2]/ 5000	3665	2735 - 2046 	2699 -2010 	2663 -1974 
	4325		2533 - 1816 	2506 - 1789 
	4325 with over-hang		2486 - 1741 	2458 - 1713 

[1] The payloads listed here for the Crafter models apply to vehicles with manual gearbox. The payload of vehicles with Shiftmatic (for 80 kW and 100 kW) is reduced by 6 kg respectively.

[2] These models are also available with Super-Single tyres. This reduces the gross vehicle weight rating by 400 kg to 4.6 tonnes. The payload is reduced accordingly.

		Trucks	
Model / gross vehicle weight rating [kg]	**Wheel-base [mm]**	**Chassis with single cab Payload[1] [kg]**	**Chassis with double cab payload[1] [kg]**
Crafter 30/ 3190 for passenger car 3000 for goods vehicle	3250	1349 - 844 	1151 - 808 
	3665	1332 - 916 	1129 - 840 
Crafter 35/ 3500	3250	1836 - 1421 	1638 - 1223 
	3665	1819 - 1403 	1616 - 1200 
	4325	1789 - 1371 	1588 - 1170 

[1] The payloads listed here for the Crafter models apply to vehicles with manual gearbox. The payload of vehicles with Shiftmatic (for 80 kW and 100 kW) is reduced by 6 kg respectively.

		Trucks	
Model / gross vehicle weight rating [kg]	**Wheel-base [mm]**	**Chassis with single cab payload[1] [kg]**	**Chassis with double cab payload[1] [kg]**
Crafter 50[2]/ 5000	3665	3094 - 2578 	2873 - 2367 
	4325	3056 - 2538 	2859 - 2424 

1 The payloads listed here for the Crafter models apply to vehicles with manual gearbox. The payload of vehicles with Shiftmatic (for 80 kW and 100 kW) is reduced by 6 kg respectively.

2 These models are also available with Super-Single tyres. This reduces the gross vehicle weight rating by 400 kg to 4.6 tonnes. The payload is reduced accordingly.

		Trucks	
Model / gross vehicle weight rating [kg]	**Wheel-base [mm]**	**Platform van with single cab payload[1] [kg]**	**Platform van with double cab payload[1] [kg]**
Crafter 30/ 3190 for passenger car 3000 for goods vehicle	3250	1151 - 736 	993 - 650 
	3665	1102 - 686 	939 - 650 
Crafter 35/ 3500	3250	1638 - 1223 	1480 - 1065 
	3665	1589 - 1173 	1426 - 1010 
	4325	1510 - 1092 	1355 - 937 

[1] The payloads listed here for the Crafter models apply to vehicles with manual gearbox. The payload of vehicles with Shiftmatic (for 80 kW and 100 kW) is reduced by 6 kg respectively.

		Trucks	
Model / gross vehicle weight rating [kg]	**Wheel-base [mm]**	**Platform van with single cab payload[1] [kg]**	**Platform van with double cab payload[1] [kg]**
Crafter 502/ 5000	3665	2793 - 2277 	2642 - 2136 
	4325	2709 - 2191 	2566 - 2131 

[1] The payloads listed here for the Crafter models apply to vehicles with manual gearbox. The payload of vehicles with Shiftmatic (for 80 kW and 100 kW) is reduced by 6 kg respectively.

[2] These models are also available with Super-Single tyres. This reduces the gross vehicle weight rating by 400 kg to 4.6 tonnes. The payload is reduced accordingly

Information

Load ratings depend on the engine. Equipment features can influence the payload or load weight by increasing/reducing the kerb weight. Please ask your Volkswagen dealership about this. The payload ranges shown here have been calculated with consideration for equipment that can be selected or deselected, or other items which do not form part of the standard scope of delivery. The actual payload of a vehicle that is calculated from the difference between the gross vehicle weight rating and unladen weight can only be determined by weighing an individual vehicle.

Information

For more information about the availability of individual combinations of gross vehicle weight rating, engine, gearbox and body variants, as well as information about consumption figures, CO_2 emissions and energy efficiency classes, refer to the sales documents and the Configurator on the Volkswagen AG website:
www.volkswagen-nutzfahrzeuge.de

Important optional equipment:

- Side exhaust pipe
- Chocks
- Front axle load increase
- End-outline marker lamps at front, preparation at rear
- Decreasing of GVW rating
- Warning lamps, warning triangle and first-aid kit
- Outside noise insulation – thermal insulation
- Increase of GVW rating to 3.88 t
- Cowl panel / platform version
- Exterior mirror (round bar)
- Auxiliary heater (coolant/air recirculation heating)
- Battery power/2nd battery
- Rear camera preparation
- Insulation for high bodies
- Preparation for hydraulic pump
- Constant speed maintenance
- Preparation for event data recorder
- Tachograph
- Roof rack preparation (panel van)
- Alternator power / 2nd Alternator
- 3-way tipper preparation
- Selectable rear axle ratio
- Preparation for supertone system/tone sequence
- Refrigerant compressor
- Rotating roof light preparation
- PTO from manual gearbox
- Electrical tail lift preparation
- Spare wheel/mounting
- Yellow rotating lights
- Tail light cluster wiring extended
- Parameterisable special module (PSM)
- Tail light cluster preparation
- Omission of rear cab wall/roof
- Anti-roll bars
- Fuel tank, 100 litre capacity
- 12 V sockets
- Speed warning function

2.11 Concept advantages

- Comprehensive range of derivatives
  + 3 extended wheelbases; panel van with additional rear overhang extension
  + Extra high roof available as third roof version
- 1.30 m wide sliding door from medium wheelbase
- Ergonomic and comfortable cab with joystick selector mechanism, relaxed seating position possible even for tall people/good access to the rear
- Extensive, functional and spacious storage compartment concept creates a tidy workplace for the driver
- An all-round safety concept (ABS, ESP and driver airbag as standard; optional front passenger airbag, head and side airbags; load securing by means of fastening eyes as standard)
- Top engines thanks to powerful, economic and environmentally friendly TDI engines, diesel particulate filters as standard (EURO 5/EURO VI)
- Shiftmatic* (automated manual gearbox) as option to make life easier for the driver with optimised gear changes and economic driving characteristics
- Long maintenance intervals
- Trend-setting basic concept offers optimum possibilities for body makers and converters
  + Cowl panel and platform version available
  + Extensive possibilities for usage of PTOs
  + Electronic module that can be programmed according to customer needs available as electrical interface
  + High load carrying capacity of chassis
  + Highly robust, torsionally rigid top-hat section frame with smooth top flange and brackets for attaching body
- High trailer load
- Large area sidewalls that are ideal for liveries on panel van
- Volkswagen quality
- Ignition bypass circuit (for special vehicles on deployment)
- Achleitner 4MOTION (permanent heavy-duty four-wheel drive system)
- BlueMotion: efficient 2.0 l TDI engine with 80 kW or 100 kW in panel vans with short wheelbase
- BlueMotion Technology package available for additional variants

* Available until May 2013

2.12 Quality system

Worldwide competition, increased quality requirements by customers on the overall product of the Transporter, national and international product liability legislation, new forms of organisation and increasing pressure on costs are demanding effective quality assurance systems in all areas of the automotive industry.
The requirements on a quality management system of this kind are described in DIN EN ISO 9001.
A VDA working group has prepared the guideline entitled "Quality management in the automotive industry - Minimum requirements on a management system for trailer and body manufacturers - System description and evaluation" for German body builders, on the basis of DIN EN ISO 9000 ff. Appeared as VDA Vol. 8 [VDA 8] (incl. CD-ROM), order no. A 13DA00080.

For the reasons stated above, Volkswagen AG strongly recommends that all body builders should set up and maintain a quality management
system with the following minimum requirements:

- Definition of responsibilities and authorisations including organisation plan.
- Description of the processes and procedures.
- Appointment of a quality management representative.
- Performing contract and build feasibility checks.
- Performing product checks based on specified procedures in test instructions.
- Regulating the handling of faulty products.
- Documentation and archiving of test results.
- Ensuring the quality records of employees are up to date.
- Systematic monitoring of test equipment.
- Systematic material and parts identification.
- Performing quality assurance measures at the suppliers.
- Ensuring the availability of process, working and test instructions, and that they are up to date, in the departments and in the workplace.

3 Planning bodies

When planning body work, the selection of a suitable basic vehicle or chassis depends on the particular application conditions of the vehicle when it is complete.
The following shall be noted:

- Vehicle or chassis configuration in accordance with requirements
- Body variant
- Standard equipment and optional extras

For orientation during planning, also use the identification plate, type designation and vehicle identification number (VIN), see 3.4 "Vehicle identification data".
You will find more information on the available chassis and body versions in 2.10 "Delivery range" or from the responsible department, see 2.1.1 "Contact in Germany" and 2.1.2 "International contact".

Practical note

During the planning of bodies, the right choice of materials and thus the observance of corrosion protection measures are important in addition to a user and maintenance friendly design (see 5.3 "Corrosion protection measures").

3.1 Selecting the base vehicle

The base vehicle needs to be selected carefully to ensure safe usage in the respective field.
Above all, make sure that:

- Wheelbase
- Engine/gearbox
- Final drive ratio
- Gross vehicle weight rating
- Centre of gravity
- Seat variant
- Electrics
- Power take-off systems

are taken into consideration during planning and are adapted for the respective application.

Practical note

Before carrying out body building or conversion work, the supplied base vehicle should be checked with regard to the fulfilment of applicable requirements.

You will find more information on the available chassis and body versions in chapters:
2.10 ""Delivery range" or from the responsible department (see 2.1 "Product and vehicle information for body builders"")

Information

On the Volkswagen AG homepage, you can put your vehicle together with the configurator and view the available optional equipment:
http://www.volkswagen-nutzfahrzeuge.de/de/cc5.html

3.2 Vehicle modifications

Before starting work on the body, the body builder should check whether

- the vehicle is suitable for the planned body.
- the chassis type and the equipment also correspond with the operating conditions after the conversion.

Build dimension drawings, product information and technical data can be requested from the responsible department or via the communication system for the planning of bodies (see 2.1.1 "Product and vehicle information for body builders").
Furthermore, the optional equipment available from the factory shall be noted (see 3.10 "Optional equipment").
Vehicles delivered from the factory comply with EC directives and the national laws (except for some vehicles for countries outside Europe).
The vehicles also need to meet the EC directives and the national laws after the modifications have been made.

Practical note

Sufficient space must be provided in order to guarantee the function and operating safety of the components.

Warning note

Do not modify the steering or brake system!
Modifications to the steering and brake system can result in these systems no longer working correctly and failing. This may result in the driver losing control of the vehicle and causing an accident.

Practical note

No modifications to the noise encapsulation are permitted.

3.2.1 Vehicle acceptance

The body builder´s officially recognised appraiser or tester must be informed about modifications to the chassis.

Practical note

Country-specific laws, directives and approval regulations shall be observed!

3.3 Dimensions and weights

Changes to the vehicle width, vehicle height and vehicle length that are below the current body builder guidelines are not allowed.
Dimensions and weights can be found in the "build dimension drawings" (see 10.5 "Build dimension drawings"), weight tables (see 10.4 "Weight tables") as well as the "Technical limit values" (see 4 "Technical limit values for planning"). These refer to the standard vehicle equipment. Optional equipment is not taken into consideration. Weight tolerances of +/-5% in production shall be taken into account (in Germany in accordance with DIN 70020).
The gross axle weight rating and the gross vehicle weight rating shall not be exceeded.

Information

You will find information on axle loads, weights and gross vehicle weight rating in the online document "Technical Data" at:
http://www.volkswagen-nutzfahrzeuge.de/de/downloads.htx

Warning note

The tyre load rating for the vehicle is not allowed to be exceeded by overloading and exceeding the gross axle weight rating. The tyres could otherwise overheat and be damaged. This may result in the driver losing control of the vehicle and causing an accident. The braking distance can be increased considerably if the vehicle is overloaded. Information for the permitted weights can be found in the vehicle identification data on the vehicle (see 3.4 ""Vehicle identification data"), in the vehicle registration and in the technical data (see 10 "Technical details").

Warning note

The permitted axle loads must be observed. If the gross axle weight ratings are exceeded, the ESC system in vehicles with ESC will no longer be able to function correctly. This may result in the driver losing control of the vehicle and causing an accident.

The permitted number of vehicle occupants and sufficient room for the payload shall be observed.
The weight of optional equipment shall be taken into account in the calculation.
The national regulations and directives apply.

3.3.1 Payload increases and reductions

In the case of any questions regarding vehicle payload increases and reduction, please contact us (see 2.1 "Product and vehicle information for body builders").

3.4 Vehicle identification data

Vehicle identification number (VIN) and identification plate on the vehicle are not allowed to be changed or fitted in a different position.
The vehicle identification number is located on the bracing belt in the engine compartment.
The identification plate with the vehicle identification number and the figures for the permitted weights is located in the driver seat box.

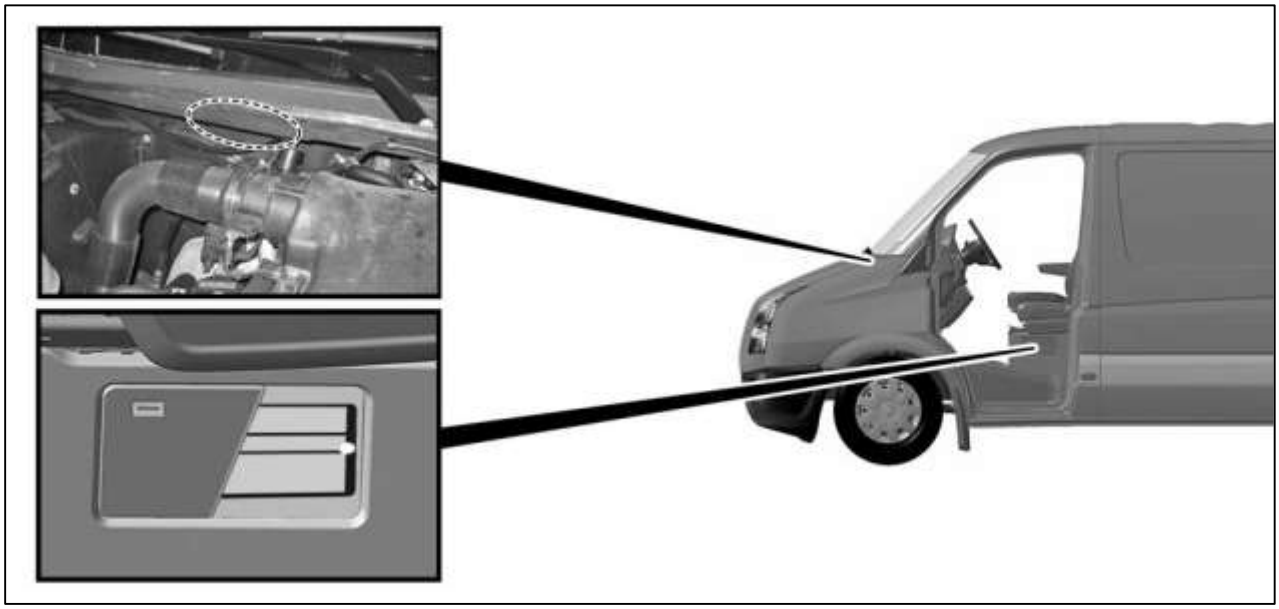

Position of vehicle identification data

3.5 Vehicle stability

When the vehicle with the body mounted is presented for approval, it is a requirements of the EC Brakes directive 71 / 320 / EEC and ECE R13 to provide mathematical proof of the height of the centre of gravity when the vehicle is loaded.
Refer to chapter 4 "Technical limit values for planning" for the permitted centre of gravity heights.
Volkswagen does not make any statement about:

- Driving behaviour
- Braking behaviour
- Steering response and
- ESP control response

in bodies for loads with an unfavourably positioned centre of gravity (e.g. rear, high and side loads), because these aspects are significantly influenced by body activities and consequently can only be assessed by the body builder.

Warning note

ESC shall be deactivated if necessary in vehicles that have extreme centres of gravity due to bodies, superstructures, installed components or conversions. The responsible department will provide information (see chapter 2.2 "Body builder guidelines, consulting").
If the ESC has been deactivated, you will need to adapt your driving style accordingly (reduced cornering speed, avoiding jolting steering movements). At the dynamic limits, the vehicle behaves like a vehicle without ESC. The permitted axle loads, gross weights and centre of gravity positions shall be observed.

Whether for conversions and installation, and also in the ready-to-drive condition, the gross wheel and axle weight ratings as well as the gross vehicle weight ratings of the vehicle are not allowed to be exceeded under any circumstances.

Warning note

The permitted axle loads must be observed. If the gross axle weight ratings are exceeded, the ESC system in vehicles with ESC will no longer be able to function correctly. This may result in the driver losing control of the vehicle and causing an accident. Further figures for the permitted weights can be found in the vehicle identification data on the vehicle (see 3.4 "Vehicle identification data").

3.6 Tyres

The body builder shall ensure that

- the spacing between the tyre and the wing or wheel housing is sufficient even when snow or anti-skid chains are fitted and with full compression (even with axle distortion) (see 7.2.8 “Wings and wheel housings”) and the corresponding figures are observed in the offer drawings
- only permitted tyre sizes (see vehicle papers) are used (see 4.2.5 “Authorised tyre sizes”)

Warning note

Exceeding the specified tyre load rating or maximum tyre speed can lead to tyre damage or tyre failure. You could lose control of your vehicle as a result and injure yourself or other persons.

Therefore only use tyre types and tyre sizes approved for your vehicle type and observe the tyre load rating and speed index required for your vehicle.

Also observe in particular the national approval regulations for tyres. In some cases, these regulations specify a certain tyre type for your vehicle or prohibit certain tyre types that are permitted in other countries.

If other wheels are fitted, the wheel brakes or running gear parts could be damaged the free movement of the wheels and tyres is no longer guaranteed. The wheel brakes or running gear parts might no longer work correctly.

Information

More information see 2.1 “Product and vehicle information for body builders” and 4.2.5 “Authorised tyre sizes”.

3.7 Bolted and welded connections

3.7.1 Bolted connections

If series-production bolts / nuts have to be renewed, it is only permitted for bolts / nuts to be used which have the:

- same diameter
- same strength
- same bolt standard or bolt type
- same surface coating (corrosion protection, coefficient of friction)
- same thread pitch

We recommend Volkswagen standard parts.

Warning note

No safety-relevant bolted connections, e.g. wheel guidance, steering and brake functions, are allowed to be modified. Otherwise the designated function may be impaired. This may result in the driver losing control of the vehicle and causing an accident.
The new installation is to be carried out according to the instructions of VW Customer Service, using suitable standard parts. We recommend using genuine Volkswagen parts.

- Comply with VDI guideline 2862 during all installations.
- Shortening the free clamping length, changing over to waisted shank and use of bolts with a shorter free thread proportion are not permitted.
- Furthermore, take the settling behaviour of screw connections into account.
- Use of Volkswagen tightening torques assumes that the total coefficient of friction is in the range μtot=0.08 to 0.14 for the particular items being bolted together.
- If bolts are tightened by torque and angle at Volkswagen, no change of design is possible.
- With the aid of the workshop manual from Volkswagen AG (see 2.1.3 “Electronic Repair and Workshop Information of Volkswagen AG (erWin)*”) determine whether the bolts and nuts of running gear components shall only be tightened after full assembly.
- Body components that are additionally clamped shall have the same or a higher strength than the previous clamped combination.

Information

Information about Volkswagen customer service instructions can be provided by any Volkswagen Customer Service.

Warning note

Bolts or nuts with locking teeth, micro-encapsulated screws and self-locking nut shall always be replaced after a single use. Before you screw in new micro-encapsulated screws, the receiving thread shall be re-tapped or the nut replaced in order to remove the remains of the old screw locking material. Then the re-cut thread through holes and tapped blind holes need to be blown clean because any glue residue in the thread will prevent the screws being tightened correctly.
If this is not observed, bending forces could act on the screw due to the incorrect screw tensioning and result in the screw breaking. This may result in the driver losing control of the vehicle and causing an accident.

Warning note

When micro-encapsulated screws are loosened, there is a risk of injury due to the sudden loosening of the screws. Therefore when loosening micro-encapsulated screws ensure that there is sufficient space for movement.

Information

Regarding special screw connections, refer to the Electronic Repair and Workshop Information System from Volkswagen AG (erWin*) (see 2.1 “Product and vehicle information for body builders”).

3.7.2 Welded connections

3.7.2.1 General

In order to maintain the high quality of welding work demanded by Volkswagen, the persons assigned to perform the welding work shall have the corresponding qualifications.

In order to achieve high-quality welds, the following basic recommendations are given:

- Thoroughly clean the areas to be welded.
- Apply several short weld beads, rather than one long one.
- Make symmetrical beads, in order to limit shrinkage.
- Avoid making more than three welds at any one point.
- Avoid welding in work-hardened areas.

Practical note

Disconnect the battery prior to starting welding work. Airbags, the airbag control unit, airbag sensors and seat belts shall be protected against weld spatter, and removed if necessary.

3.7.2.2 Selection of welding process

The mechanical properties of welds depend on which welding process is selected, and on the geometry of the parts to be connected.
If welding overlapping metal panels, select the welding process according to the accessibility of the sides:

Accessible sides	**1**	Shielding gas hole spot welding
	2	Spot welding

3.7.2.3 Spot welding

Spot welding is used for overlapping parts with access on both sides. Avoid spot welding of more than two layers of metal panels.

Distance between spot welds:

In order to avoid shunt effects, the specified distances between the spot welds shall be maintained (d = 10 e + 10 mm).

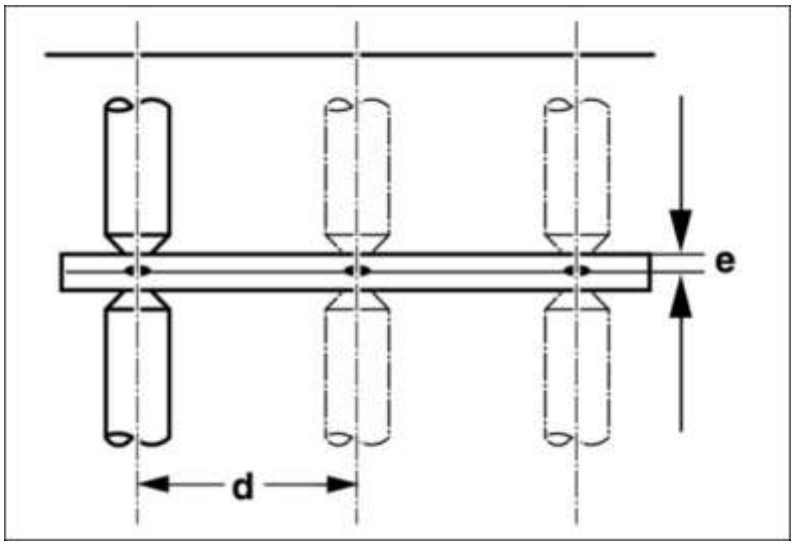

Ratio between panel thickness and distance between welds

d Distance between spot welds

e Panel thickness

Distance from the edge of the panel:

In order to avoid damage to the molten core, the specified distances from the edge of the panel shall be maintained (L = 3 e + 2 mm).

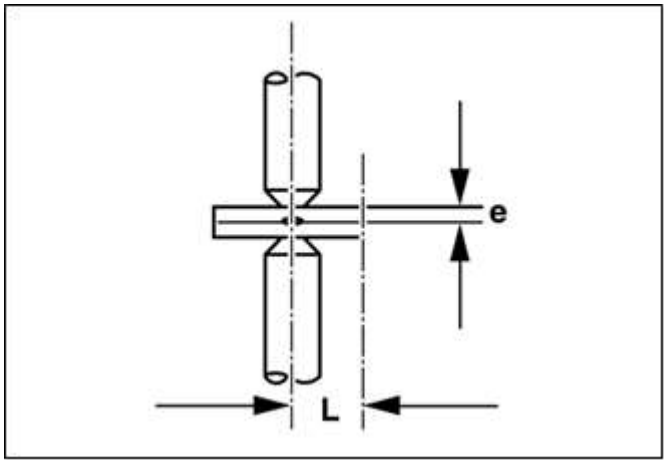

Ratio between panel thickness and distance from edge

e Panel thickness

L Distance from the edge of the panel

3.7.2.4 Shielding gas hole spot welding

If overlapping panels can only be accessed from one side, the weld shall be made by shielding gas hole spot welding or tacking. If the connection is achieved by punching or drilling and then spot welding the hole, the drilling area must be deburred before welding is carried out.

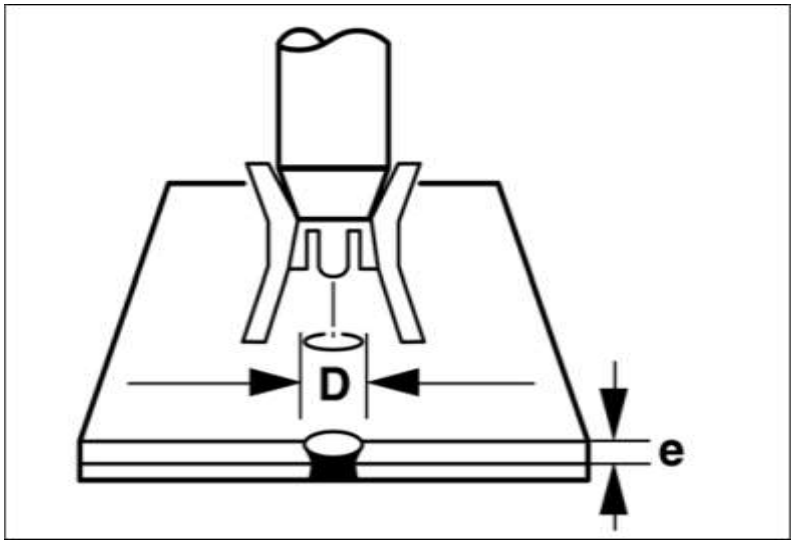

Ratio between panel thickness and hole diameter

Hole diameter D [mm]	4.5	5	5.5	6	6.5	7
Sheet thickness e [mm]	0.6	0.7	1	1.25	1.5	2

The mechanical quality can additionally be improved by using “slots” (l = 2 x b).

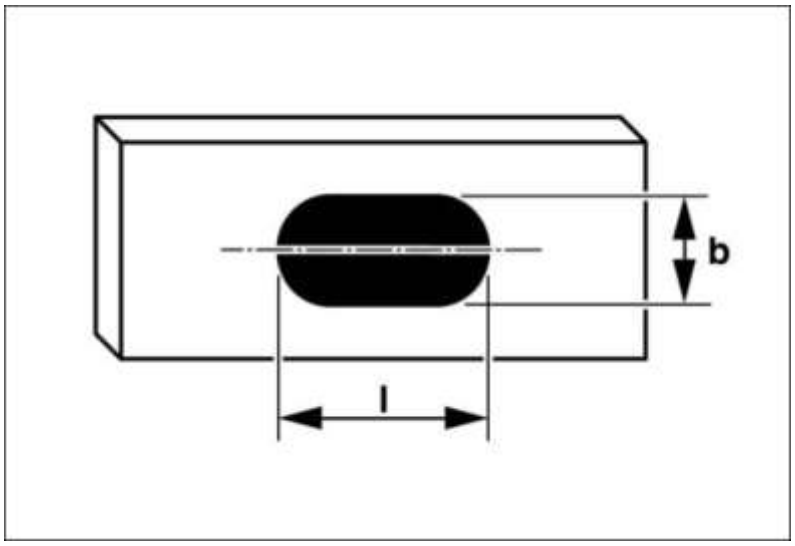

Ratio between width and length of slots

b Width of slot

l Length of slot

3.7.2.5 Tacking

If panels are > 2 mm thick, overlapping panels can also be connected by tack-welding (30 mm < L < 40 x e; d > 2 L).

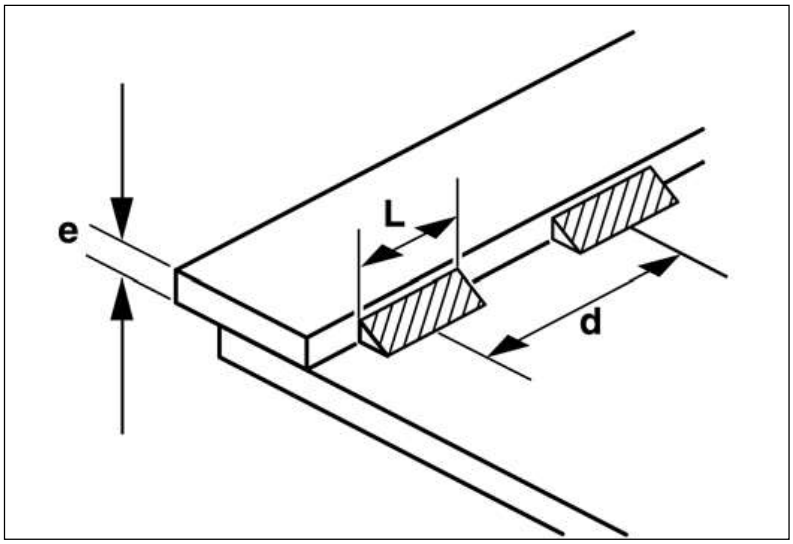

Dimensions for tack-welding

d Distance between tack welds

e Panel thickness

L Length of tack weld

3.7.2.6 Welding is not allowed

- On mechanical units such as the engine, gearbox, axles etc.
- On chassis frame except on the frame longitudinal members for wheelbase or overhang modifications.

Information

You will find further information in the chapters
4 "Technical limit values in planning" and
5 "Prevention of damage" as well as
section 7.2.1 "General information on body-in-white/bodywork" and the "Electronic repair and workshop information" (erWin) of Volkswagen AG

3.7.2.7 Corrosion protection after welding

After all welding work on the vehicle, it is necessary to comply with the specified corrosion protection measures (see chapter 5.3 "Corrosion protection measures").

Practical note

The information listed under chapter
5.2 "Welding work" and
chapter 7 "Modifications to the base vehicle"
shall be observed.

3.8 Noise insulation

If changes are made to noise-related parts like, for example:

- Engine
- Exhaust system
- Air intake system
- Tyres etc.

then noise measurements shall be performed.

The national regulations and directives apply.
In the Federal Republic of Germany, the following shall be observed:

- ECE-R 51
- § 49.3 StVZO (low-noise)

Components for sound insulation that are installed as standard are not allowed to be removed or modified.
The interior noise situation is not allowed to be worsened.

Practical note

For all modifications to the vehicle, the external noise of the vehicle defined according to ECE Regulation ECE-R 51 must be observed.

Practical note

In order to prevent the noise level of the vehicle being affected by modifications, attention shall be paid to the minimisation of interior noise during the planning of bodies.
(See 7.4.4 “Reducing interior noise”)

3.9 Maintenance and repairs

The maintenance and repair of the vehicle shall not be hindered by the body. Observe the owner's manual.

- Maintenance points and mechanical units shall remain easily accessible.
- Maintenance flaps or screw-on back panels shall be fitted to storage boxes.
- The battery box shall have sufficient ventilation.
- Check power and condition of batteries and service them in accordance with manufacturer's instructions (see 3.9.2 "Maintenance and storage of batteries").

Practical note

If the vehicle is not driven for longer periods, damage to the battery could result. This can be avoided by disconnecting the battery and storing it correctly (see 3.9.2 "Maintenance and storage of batteries").

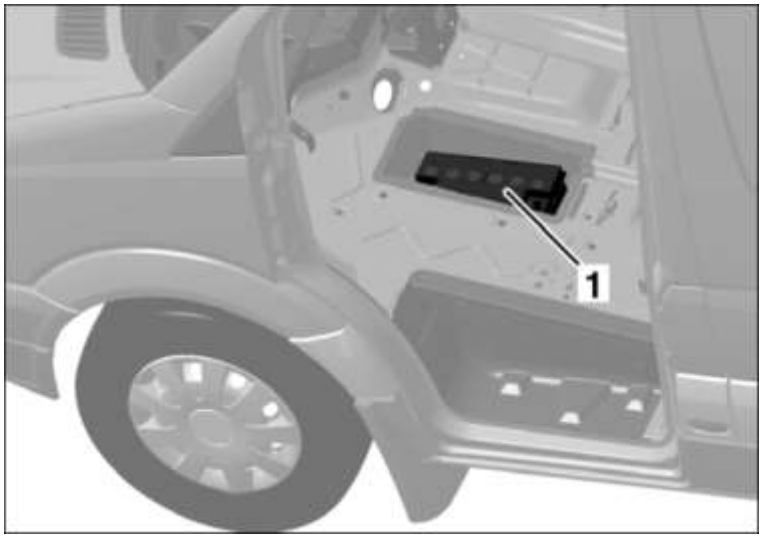

Installation position of main battery

[1] Main battery

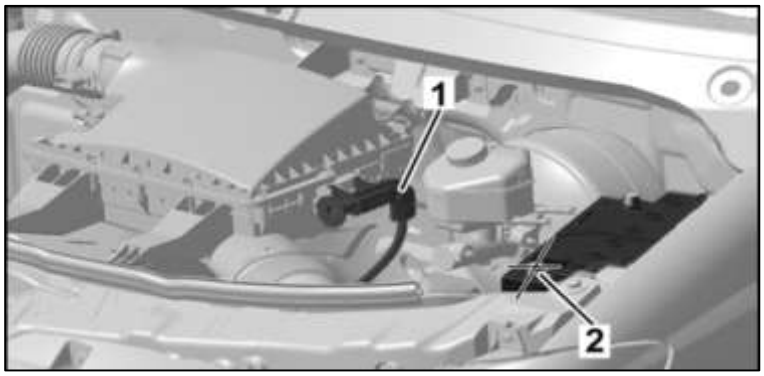

Installation position of jump-start terminal

[1] jump-start terminal

[2] positive battery terminal on additional battery - not suitable for jump-start!

If the vehicle is to be started by an external power supply, either the jump start point or the main battery shall be used.

Practical note

The additional battery located in the engine compartment shall not be used as an external power supply as this could cause damage to the vehicle (see 6.3 “Battery”).

Additional work resulting from the body will not be covered by Volkswagen in warranty, maintenance or repair operations.

The following shall be observed by the body builder before delivering the vehicle:

- Check the headlight adjustment or have it checked by a qualified specialist workshop. We recommend a Volkswagen customer service department.
- The wheel nuts/wheel bolts must be tightened to the specified torque.
- Volkswagen recommends coordinating maintenance work on the body with the valid maintenance systems from Volkswagen. This applies both to the type and scope and also to the time intervals or mileages that are used as a basis for servicing.
- Owner's manual and maintenance instructions for the body building work performed and additional components fitted shall be supplied with the vehicle by the body builder in the language of the country where the vehicle will be used.

3.9.1 Storing the vehicle

3.9.1.1 Storing in closed spaces

- Clean the whole vehicle
- Check oil and fluid levels
- Increase specified tyre pressure by 0.5 bar
- Release the handbrake and fit chocks
- Disconnect the battery in charged condition (more than 80%) and grease the cable lugs and terminals

3.9.1.2 Storage outdoors (< 1 month)

- Perform the same steps as for closed spaces
- Close all air vents and set the heating to "Off"

3.9.1.3 Storage outdoors (> 1 month):

- Perform the same steps as for closed spaces
- Fold the windscreen wipers away from the windscreen
- Close all air vents and set the heating to "Off"
- Remove the battery and store it in accordance with the manufacturer's instructions
  (see chapter 3.9.2 "Maintenance and storage of batteries")

3.9.1.4 Maintenance of the stored vehicle (with storage > 1 month)

- Check oil level once per month
- Check coolant once per month
- Check tyre pressure once per month

3.9.1.5 Taking vehicle out of storage

- Check the vehicle fluid levels
- Set tyres to specified pressure
- Check battery charge level and install
- Clean the whole vehicle

3.9.2 Maintenance and storage of batteries

If the vehicle is parked or stored for a long period, make sure that the battery is always in a charged condition (more than 80 % - corresponding to an open-circuit voltage of approx. 12.55 V).
To avoid damage to the battery, it shall be disconnected if the vehicle is not going to be driven for longer than a week.
If the vehicle is not driven for longer than one month, the battery shall be removed and stored in a dry place in temperatures between 0 °C bis 30 °C.
The battery shall be stored upright.
The battery voltage shall be kept constantly above 12.55 V.
The battery needs to be charged if the battery voltage falls below 12.55 V, but not below 12.1 V.

Practical note

If the battery voltage falls below 12.1 V, the battery will be damaged and will need to be replaced.

3.9.3 Work before delivering the converted vehicle

The entry of the work performed and modifications shall be confirmed by the body builder in the service schedule

3.9.3.1 Check of the whole vehicle

Check that the vehicle is in perfect condition. Any damage shall be repaired.

3.9.3.2 Check of the brake system

The brake fluid shall be changed every two years.
If you do not know how long a vehicle with hydraulic brake system has been standing, the brake fluid shall be changed.
Electrical and hydraulic lines shall be checked for any kind of damage and replaced if necessary.

3.9.3.3 Check of the battery

The charge level of the battery shall be checked before delivery of the vehicle and corrected if necessary.

3.9.3.4 Check of the tyres

Before the vehicle is delivered, the tyres shall be checked for the correct pressure and for damage. Damaged tyres shall be replaced.

3.9.3.5 Check of the wheel setting

If modifications have been made by body repair shops, we recommend checking the wheel alignment. For more information, refer to the Electronic Repair and Workshop Information from Volkswagen AG (erWin).

3.10 Optional equipment

We recommend using the optional equipment from Volkswagen AG that can be obtained with a PR no. for optimum adaptation of the body to the vehicle.
You can obtain information on the optional equipment provided by Volkswagen under PR nos. from your Volkswagen Customer Service or in the advice for body builders (see 2.1 “Product and vehicle information for body builders”)

Information

On the Volkswagen AG homepage, you can put your vehicle together with the configurator and view the available optional equipment:
http://www.volkswagen-nutzfahrzeuge.de/de/cc5.html

Optional equipment (e. g. reinforced springs, frame reinforcements, additional tanks, anti-roll bars etc.) or equipment fitted later increase the kerb weight of the vehicle.
The actual vehicle weight and the axle loads should be determined before the body is built.
Not all additional equipment can be built into any vehicle without problems. This applies in particular if it is fitted later on.

4 Technical limit values for planning

4.1 Limit values of base vehicle

Practical note

This chapter contains the most important technical limit values for the base vehicle that are required for planning. Furthermore the other chapters of the latest body builder guidelines shall also be observed.

4.1.1 Steerability

- In all load situations, the front axle load shall correspond at least with the following parts of the permitted gross vehicle weight:

M1 approval	At least 30 % of the gross vehicle weight
N1 to N2 – approval	At least 25% of the gross vehicle weight

- The gross axle weight ratings shall always be observed in all loading situations (see chap. 10.4 “Weight tables”).
- The aforementioned values apply to series production vehicles with two axles. In converted vehicles with an additional rear axle (three-axle vehicle), a minimum front axle load of 20% is sufficient.

4.1.2 Maximum permitted centre of gravity

y-direction	When the vehicle is loaded, the wheel load (1/2 the axle load) is only allowed to be exceeded by 4 %.

4.1.2.1 Height of centre of gravity with ESC

The height of the centre of gravity of vehicles with ESC is not allowed to exceed 1300 mm.

Practical note

If the height of the centre of gravity of the whole vehicle is greater than 1300 mm, the ESC regulation quality can be negatively influenced. If there is a loss in comfort in individual cases, we recommend deactivating the ESC.

4.1.3 Vehicle dimensions

4.1.3.1 Vehicle width

Statutory limit values acc. to EC Directive 97/27/EC and 92/21/EEC	
General	2550 mm
Passenger car (M1)	2500 mm

Width limit on Crafter via standard headlights	
Standard headlights	≤ 2,440 mm
Standard headlights with fog light in bumper	≤ 2,360 mm

Width limit on Crafter due to exterior mirrors (indirect view)	
Standard exterior mirrors	Vehicle width ≤ 2190 mm
Optional equipment short bar mirrors PR no. 5SM/5RF	vehicle width ≥ 2190 mm to ≤ 2300 mm
Optional equipment long bar mirror PR no. 5SP/5RG	vehicle width ≥ 2300 mm to < 2488 mm

4.1.3.2 Vehicle height

When planning the body, it is necessary to take account of the technical limit values of the vehicle with regard to the centre of gravity acc. to chapter 4.1.2 "Maximum permitted centre of gravity".
Furthermore, it is necessary to consider the road traffic regulations acc. to EC Directive 97/27/EC and 92/21/EEC (M1 vehicles) as well as possible special regulations of the relevant registering states.

Acc. to EC Directive 97/27/EC and 92/21/EEC
4000 mm

4.1.3.3 Vehicle length

When planning the body, it is necessary to take account of the technical limit values of the vehicle with regard to the max. overhangs acc. to chapter 4.3.4 "Vehicle overhang". This results in a maximum vehicle length of approx. 7500 mm with a long wheelbase. Furthermore, it is necessary to consider the road traffic regulations acc. to EC Directive 97/27/EC and 92/21/EEC (M1 vehicles) as well as possible special regulations of the relevant registering states.

Acc. to EC Directive 97/27/EC and 92/21/EEC
12000 mm

4.1.3.4 Frame heights

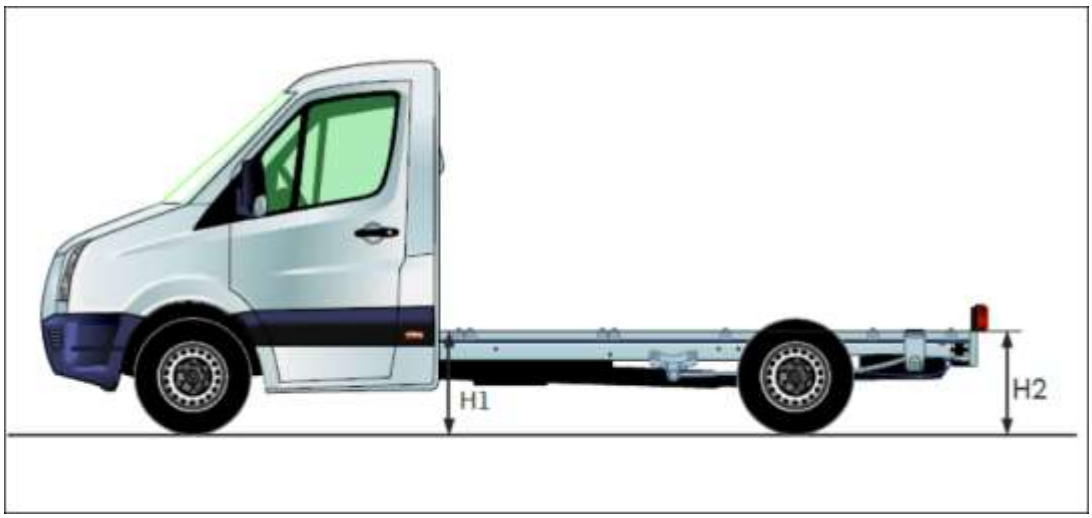

Frame height

Serial no.	Vehicle type	Wheelbase [mm]		Dimension from road surface to top edge of chassis frame			
				H1 (behind the cab) [mm]		H2 (at end of frame) [mm]	
				Laden**	Unladen*	Laden**	Unladen*
1	Crafter chassis 3.5t	short	3250	610	665	595	740
		medium	3665	610	660	595	740
		long	4325	610	650	595	745
2	Crafter double cab 3.5t	short	3250	610	680	595	735
		medium	3665	610	670	595	735
		long	4325	610	660	595	740
3	Crafter chassis 4.6t (with Super-Single tyres)	medium	3665	670	735	690	875
		long	4325	670	720	690	875
4	Crafter double cab 4.6t (with Super-Single tyres)	medium	3665	675	760	690	880
		long	4325	675	740	690	880
5	Crafter chassis 5.0t	medium	3665	650	720	660	840
		long	4325	650	705	660	840
6	Crafter double cab 5.0t	medium	3665	650	740	660	845
		long	4325	650	725	660	845

Status on: 30 Oct 2008

* At unladen weight (vehicle without body work)

** At GVWR

Practical note

Please note that the frame heights are theoretically calculated reference values. They are not allowed to be used as the sole basis for designing bodies. The actual dimensions on the vehicle might deviate from the heights specified here, due to production tolerances. Before the conversion starts, check the actual height dimensions on the chassis!

Practical note

The specified frame heights are theoretically calculated values for chassis with series production rear springs (PR no. 1P0) and series production tyres (PR nos. HR2, HR3 or HR4).

The values for the unladen status are theoretical values derived from a vehicle laden with maximum axle loads, taking account of the corresponding spring characteristic.

Please note that the frame height is also significantly dependent on the running gear package used (see chapter 4.2.3 "Offer structure"), the tyre size and the body weight.

In practice, newly assembled chassis might stand somewhat higher at the rear that indicated by the calculation, because the springs and shock absorbers have not yet been loaded.

In chassis with 4.6 t and 5 t (marked in bold in the table), the spring rebound travel is restricted by the shock absorber.

Depending on equipment, the height dimensions might differ by approx. ±40mm.

4.1.4 Welding is not allowed:

- On the A and B-pillars
- On the upper and lower chords of the frame
- In bend radii
- In the area of airbags
- Hole welding is only permitted in the vertical webs of the frame longitudinal member.

Further information can be found under 5.2 "Welding work" and 3.7 "Bolted and welded connections".

4.1.5 Drilling is not allowed:

- On the A and B-pillars
- On the upper and lower chords of the frame longitudinal member
- In the area of the load application points (e.g. spring blocks)
- In the area of supporting parts for the front or rear axles
- In the area of airbags

Practical note

Holes in the frame longitudinal member are the result of the production process and are not suitable for all body building work. Use of holes from the production process is not allowed otherwise damage to the frame could result.

Further information can be found under chapter 3.7 “Bolted and welded connections”.

4.2 Limit values for running gear

4.2.1 General information

Several running gear variants are available from the factory. A suitable running gear variant shall be selected depending on the planned body.
(see also the running gear brochure: "The new Crafter running gear package for special requirements")

		Panel van									**Panel van**					**Single cab**							**Double cab**						
Crafter range		**3.0t**		**3.5t**				**5.0t**			**3.0t**		**3.5t**			**3.0t**		**3.5t**			**5.0t**		**3.0t**		**3.5t**			**5.0t**	
		SWB	MWB	SWB	MWB	LWB	L/OLW	MWB	LWB	L/OLW	SWB	MWB	SWB	MWB	LWB	SWB	MWB	SWB	MWB	LWB	MWB	LWB	SWB	MWB	SWB	MWB	LWB	MWB	LWB
		2EA0	2ED0	2EA1	2ED1	2EH1	2EX1	2ED2	2EH2	2EX2	2EB0	2EE0	2EB1	2EE1	2EK1	2FC0	2FF0	2FC1	2FF1	2FL1	2FF2	2FL2	2FZ0	2FG0	2FZ1	2FG1	2FM1	2FG2	2FM2
GC0	Without special running gear package	●	●	●	●	–	–	●	●	●	●	●	●	●	●	●	●	●	●	●	–	–	●	●	●	●	●	–	–
ZG2	Running gear package A	○	○	○	○	●	●	○	○	○	–	–	○	○	-	○	○	○	○	○	●	●	○	○	○	○	○	●	●
ZG3	Running gear package B	–	–	○	○	○	○	○	○	○	–	–	○	○	○	–	–	○	○	○	○	○	–	–	○	○	○	○	○
ZG4	Running gear package C	–	–	○	○	○	○	○	○	○	–	–	○	○	○	–	–	○	○	○	○	○	–	–	○	○	○	○	○
ZG5	Running gear package D1	–	–	–	–	–	–	–	–	–	–	–	–	–	–	–	–	○	○	○	○	○	–	–	○	○	○	○	○

● Standard ○ Optional – Not available [1] ZG5 cannot be ordered for 2FZ1A* and 2FG1A*.

SWB = Short wheelbase

MWB = medium wheelbase

LWB = long wheelbase

OLW = Long wheelbase with overhang

4.2.1.1 Description of the running gear applications

Running gear package	Vehicle characteristics*	Example of use
A	Increased kerb weight due to structure Increased centre of gravity Usually loaded to the limit of the gross vehicle weight rating Increased driving comfort required	Dumper vehicles, ambulances, articulated vehicles
B	Usually loaded to the limit of the gross vehicle weight rating Extended overhang at rear	Car transporters
C	Increased kerb weight Increased centre of gravity Usually loaded to the limit of the gross vehicle weight rating High driving comfort required More than 9 seats Roof loads often utilised	Buses, transporters for money and valuable items, mobile homes based on panel vans/window vans, sales vehicles, trolleys
D	Increased kerb weight High driving comfort required Utilisation of the gross vehicle weight rating often given More than 9 seats Extended overhang at rear	Buses, drinks transporters, mobile homes based on chassis, camper bodies

Information

For more information on selecting the running gear variant according to the planned body, please refer to the chassis brochure produced by Volkswagen AG, "The Crafter running gear packages for special requirements". Please contact us about this (see chapter 2.1.1 "Contact in Germany" and 2.1.2 "International contact").

4.2.2 Description of PR no. families

4.2.2.1 Front axle weight class

PR no. 0JB 0JC

These PR nos. add reinforcements to the front axle (GRP springs) and the axle suspension. This increases the maximum permitted front axle load.

With the 3.5 t vehicle, 1,800 kg instead of the standard 1,650 kg are permitted

With the 5.0 t vehicle, 2000 kg instead of the standard 1850 kg are permitted

4.2.2.2 Running gear damping/suspension

PR no.: 1BF, 2MQ, 2MR

These PR nos. add shock absorbers suitable for the application with modified characteristics.

4.2.2.3 Front and rear anti-roll bars

PR No.: 0AB, 0AC, 0BB, 0BC, 0BD

These PR nos. add anti-roll bars suitable for the application with modified diameter.

4.2.2.4 Running gear suspension

PR No.: 1P2, 1P4, 1P5, 1P6, 1P8

These PR nos. add rear springs suitable for the application with modified maps.

For optimum driving performance of the vehicle in empty and loaded state, the components front axle, shock absorbers, springs and anti-roll bar are linked via the regulatory system.

4.2.3 Offer structure

				Panel van									Window van					Platform van							Double cab						
				OWL		**OWC**				**OWF**			**OWL**		**OWC**			**OWL**		**OWC**			**OWF**		**OWL**		**OWC**			**OWF**	
				3.0t		3.5t				5.0t			3.0t		3.5t			3.0t		3.5t			5.0t		3.0t		3.5t			5.0t	
				SWB	MWB	SWB	MWB	LWB	L/OLW	MWB	LWB	L/OLW	SWB	MWB	SWB	MWB	LWB	SWB	MWB	SWB	MWB	LWB	MWB	LWB	SWB	MWB	SWB	MWB	LWB	MWB	LWB
				0E1	0E3	0E1	0E3	0E2	0E6	0E3	0E2	0E6	0E1	0E3	0E1	0E1	0E2	0E1	0E3	0E1	0E3	0E2	0E3	0E2	0E1	0E3	0E1	0E3	0E2	0E3	0E2
Item	FAM	PR No.	PR. no. designa-tion	2EA0	2ED0	2EA1	2ED1	2EH1	2EX1	2ED2	2EH2	2EX2	2EB0	2EE0	2EB1	2EE1	2EK1	2FC0	2FF0	2FC1	2FF1	2FL1	2FF2	2FL2	2FZ0	2FG0	2FZ1	2FG1	2FM1	2FG2	2FM2
41	GKV	Front axle weight class																													
42	GKV	0JA	Standard front axle	S	S	S	S	S	S	S	S	S	S	S	S	S		S	S	S	S	S	S	S	S	S	S	S	S	S	S
43	GKV	0JB	Front axle reinforced for Crafter 35 (perm. front axle load 1,800 kg)		O	O	O	O							O	O	S			O	O	O					O	O	S		

				Panel van									Window van					Platform van							Double cab						
				OWL		OWC				OWF			OWL		OWC			OWL		OWC			OWF		OWL		OWC			OWF	
				3.0t		3.5t				5.0t			3.0t		3.5t			3.0t		3.5t			5.0t		3.0t		3.5t			5.0t	
				SWB	MWB	SWB	MWB	LWB	L/OLW	MWB	LWB	L/OLW	SWB	MWB	SWB	MWB	LWB	SWB	MWB	SWB	MWB	LWB	MWB	LWB	SWB	MWB	SWB	MWB	LWB	MWB	LWB
				0E1	0E3	0E1	0E3	0E2	0E6	0E3	0E2	0E6	0E1	0E3	0E1	0E1	0E2	0E1	0E3	0E1	0E3	0E2	0E3	0E2	0E1	0E3	0E1	0E3	0E2	0E3	0E2
44	GKV	0JC	Front axle, reinforced for Crafter 50 (perm. front axle load 2,000 kg)						O	O	O												O	O						O	O
45	DAE	Running gear damping/ suspension																													
46	DAE	1BA	Standard shock absorber	S	S	S	S	S	S	S	S	S	S	S	S	S	S	S	S	S	S	S	S	S	S	S	S	S		S	S
47	DAE	1BF	Strengthened rear shock absorbers	O	O	O	O	O	O				O	O	O	O	S	O	O	O	O	O			O	O	O	O	S		
48		2MQ	Shock absorber for active roll stabilisation			O	O	O	O	O	O	O			O	O	O			O	O	O	O	O			O	O	O	O	O

				Panel van									Window van					Platform van							Double cab						
				OWL		OWC				OWF			OWL		OWC			OWL		OWC			OWF		OWL		OWC			OWF	
				3.0t		3.5t				5.0t			3.0t		3.5t			3.0t		3.5t			5.0t		3.0t		3.5t			5.0t	
				SWB	MWB	SWB	MWB	LWB	L/OLW	MWB	LWB	L/OLW	SWB	MWB	SWB	MWB	LWB	SWB	MWB	SWB	MWB	LWB	MWB	LWB	SWB	MWB	SWB	MWB	LWB	MWB	LWB
				0E1	0E3	0E1	0E3	0E2	0E6	0E3	0E2	0E6	0E1	0E3	0E1	0E1	0E2	0E1	0E3	0E1	0E3	0E2	0E3	0E2	0E1	0E3	0E1	0E3	0E2	0E3	0E2
49	DAE	GC5	Shock absorber for active roll stabilisation of campers															O	O	O	O	O	O	O							
50	FFW		Running gear suspension																												

S= Standard equipment

O = Optional

				Panel van									Window van					Platform van							Double cab						
				OWL		OWC				OWF			OWL		OWC			OWL		OWC			OWF		OWL		OWC			OWF	
				3.0t		3.5t				5.0t			3.0t		3.5t			3.0t		3.5t			5.0t		3.0t		3.5t			5.0t	
				SWB	MWB	SWB	MWB	LWB	L/OLW	MWB	LWB	L/OLW	SWB	MWB	SWB	MWB	LWB	SWB	MWB	SWB	MWB	LWB	MWB	LWB	SWB	MWB	SWB	MWB	LWB	MWB	LWB
				0E1	0E3	0E1	0E3	0E2	0E6	0E3	0E2	0E6	0E1	0E3	0E1	0E1	0E2	0E1	0E3	0E1	0E3	0E2	0E3	0E2	0E1	0E3	0E1	0E3	0E2	0E3	0E2
Item	FAM	PR. no.	PR. no. Designation	2EA0	2ED0	2EA1	2ED1	2EH1	2EX1	2ED2	2EH2	2EX2	2EB0	2EE0	2EB1	2EE1	2EK1	2FC0	2FF0	2FC1	2FF1	2FL1	2FF2	2FL2	2FZ0	2FG0	2FZ1	2FG1	2FM1	2FG2	2FM2
51	FFW	1P0	standard suspension	S	S	S	S	S	S	S	S	S	S	S				S	S				S	S	S	S				S	S
52	FFW	1P2 Suspension	rear strengthened (for campers)	O	O								O	O				O	O	O	O	O	O	O	O	O					
53	FFW	1P4	Springs for lowered running gear (for lowered overall height)			O	O	O	O	O	O	O											O	O						O	O
54	FFW	1P5	Rear comfort suspension			O	O	O	O						S	S	S	O	O	S	S	S			O	O	S	S	S		

				Panel van									Window van					Platform van							Double cab						
				OWL		OWC				OWF			OWL		OWC			OWL		OWC			OWF		OWL		OWC			OWF	
				3.0t		3.5t				5.0t			3.0t		3.5t			3.0t		3.5t			5.0t		3.0t		3.5t			5.0t	
				SWB	MWB	SWB	MWB	LWB	L/OLW	MWB	LWB	L/OLW	SWB	MWB	SWB	MWB	LWB	SWB	MWB	SWB	MWB	LWB	MWB	LWB	SWB	MWB	SWB	MWB	LWB	MWB	LWB
				0E1	0E3	0E1	0E3	0E2	0E6	0E3	0E2	0E6	0E1	0E3	0E1	0E1	0E2	0E1	0E3	0E1	0E3	0E2	0E3	0E2	0E1	0E3	0E1	0E3	0E2	0E3	0E2
55	FFW	1P6	Softer rear suspension (for reduced load capacity)			O	O	O	O	O	O	O								O	O	O	O	O			O	O	O	O	O
56	FFW	1P8	Comfort suspension (two-layer at rear, for vehicles with 3.88 t gross vehicle weight rating)			O	O	O	O																						
57	STV	Front anti-roll bar																													

				Panel van									Window van					Platform van							Double cab						
				OWL		OWC				OWF			OWL		OWC			OWL		OWC			OWF		OWL		OWC			OWF	
				3.0t		3.5t				5.0t			3.0t		3.5t			3.0t		3.5t			5.0t		3.0t		3.5t			5.0t	
				SWB	MWB	SWB	MWB	LWB	L/OLW	MWB	LWB	L/OLW	SWB	MWB	SWB	MWB	LWB	SWB	MWB	SWB	MWB	LWB	MWB	LWB	SWB	MWB	SWB	MWB	LWB	MWB	LWB
				0E1	0E3	0E1	0E3	0E2	0E6	0E3	0E2	0E6	0E1	0E3	0E1	0E1	0E2	0E1	0E3	0E1	0E3	0E2	0E3	0E2	0E1	0E3	0E1	0E3	0E2	0E3	0E2
58	STV	0AA	Without front anti-roll bar	S	S								S	S				S	S						S	S					
59	STV	0AB	Front anti-roll bar	O	O	S	S	S		S	S	S	O	O	S	S		O	O	S	S	S			O	O	S	S	S		
60	STV	0AC	Front anti-roll bar, rein-forced			O	O	O	S	O	O	O			O	O	S			O	O	O	S	S			O	O	O	S	S

S= Standard equipment

O = Optional

				Panel van									Window van					Platform van							Double cab						
				OWL		OWC				OWF			OWL		OWC			OWL		OWC			OWF		OWL		OWC			OWF	
				3.0t		3.5t				5.0t			3.0t		3.5t			3.0t		3.5t			5.0t		3.0t		3.5t			5.0t	
				SWB	MWB	SWB	MWB	LWB	L/OLW	MWB	LWB	L/OLW	SWB	MWB	SWB	MWB	LWB	SWB	MWB	SWB	MWB	LWB	MWB	LWB	SWB	MWB	SWB	MWB	LWB	MWB	LWB
				0E1	0E3	0E1	0E3	0E2	0E6	0E3	0E2	0E6	0E1	0E3	0E1	0E1	0E2	0E1	0E3	0E1	0E3	0E2	0E3	0E2	0E1	0E3	0E1	0E3	0E2	0E3	0E2
Item	FAM	PR. no.	PR. no. designa-tion	2EA0	2ED0	2EA1	2ED1	2EH1	2EX1	2ED2	2EH2	2EX2	2EB0	2EE0	2EB1	2EE1	2EK1	2FC0	2FF0	2FC1	2FF1	2FL1	2FF2	2FL2	2FZ0	2FG0	2FZ1	2FG1	2FM1	2FG2	2FM2
61	STH	Rear anti-roll bar																													
62	STH	0BA	Without anti-roll bar, rear, front	S	S	S	S						S	S	S	S		S	S	S	S	S			S	S	S	S	S		
63	STH	0BB	Rear anti-roll bar (5.0 t: 28 mm)							S	S	S																			
64	STH	0BC	Rear anti-roll bar (3.5 t: 17 mm) (5.0 t: 31 mm)			O	O	S	S	O	O	O			O	O	S			O	O	O	S	S			O	O	O	S	S

				Panel van									Window van					Platform van							Double cab						
				OWL		OWC				OWF			OWL		OWC			OWL		OWC			OWF		OWL		OWC			OWF	
				3.0t		3.5t				5.0t			3.0t		3.5t			3.0t		3.5t			5.0t		3.0t		3.5t			5.0t	
				SWB	MWB	SWB	MWB	LWB	L/OLW	MWB	LWB	L/OLW	SWB	MWB	SWB	MWB	LWB	SWB	MWB	SWB	MWB	LWB	MWB	LWB	SWB	MWB	SWB	MWB	LWB	MWB	LWB
				0E1	0E3	0E1	0E3	0E2	0E6	0E3	0E2	0E6	0E1	0E3	0E1	0E1	0E2	0E1	0E3	0E1	0E3	0E2	0E3	0E2	0E1	0E3	0E1	0E3	0E2	0E3	0E2
65	STH	0BD	Rear anti-roll bar (3.5 t: 21 mm) (5.0 t: 34 mm) larger diameter			O	O	O	O	O	O	O			O	O				O	O	O	O	O			O	O	O	O	O

S= Standard equipment

O = Optional

4.2.4 Gross axle weight ratings

See 2 “General information” for more details.

Warning note

The permitted axle loads must be observed. If the gross axle weight ratings are exceeded, the ESC system in vehicles with ESC will no longer be able to function correctly. Furthermore, the overload can lead to damage to the running gear and load-bearing parts. This may result in the driver losing control of the vehicle and causing an accident. For information about axle loads and the gross vehicle weight rating of the Crafter, refer to chapter 10.4 “Weight tables” as well as the sales documents on the Internet.

4.2.5 Authorised tyre sizes

Gross weight [t]	Equipment		Tyre size	Weight and speed index
3.0			205/75 R16 C	110/108R
3.5			235/65 R16 C	115/113R
	2		235/60 R17 C	117/115R
	3		225/75 R16 C	116/114R
3.88			235/65 R16 C	121N (116R)
4.6			195/75 R16 C	107/105R
	1	FA	235/65 R16 C	115/113 R
		RA	285/65 R16 C	128N (116R)
	2		205/75 R16 C	110/108R
5.0			195/75 R16 C	107/105R
	2		205/75 R16 C	110/108R
1				

[1] With optional equipment Super-Single, PR no. 1UW

[2] Optional equipment

[3] SW PR no. 1SD

4.2.6 Turning circle

See:

- European Union: 97/27/EC
- European Union: 96/53/EC

Wheelbase [mm]	Turning circle [m]
3250	12.3
3665	13.5
4325	15.6

4.2.7 Modifications to axles

Modifications to the running gear and the axles are not permitted (see 7.1 “Running gear”).

4.2.8 Modifications to the steering system

Modifications to the steering system are not permitted (see 7.1 “Running gear”).

4.2.9 Modifications to the brake system

Modifications to the brake system are not permitted.
Modifications to the air supply and air outlet of disc brakes are not permitted (see 7.1.3 "Brake system").
Chocks are required for vehicles with a gross vehicle weight rating > 4 t in accordance with §41 Abs.14 StVZO.

4.2.10 Modification of springs, suspension mounting, shock absorbers

Modifications to springs and shock absorbers can only be made by configuring the front and rear together. The combinations specified at the factory shall be used.
More information and, if necessary, corresponding safety certificates can be obtained from the responsible department (see 2.2 "Body builder guidelines, consulting").
The use of springs and shock absorbers that do not correspond with the properties of the standard parts or the parts available as optional equipment is not permitted. We recommend using Volkswagen standard parts.
Modifications to the steering system are not permitted (see 7.1 "Running gear").

4.2.11 Wheel alignment settings

Changes to the steering geometry or wheel alignment parameters are not permitted (see 7.1 "Running gear").
Comply with the information in 7.1.1. "General information on running gear" if the body or equipment appertaining to the vehicle and permanently carried on it result in a higher kerb weight, or if the vehicle is predominantly used when fully laden. This might be the case, for example, with recovery vehicles, fire brigade vehicles, ambulances, rescue vehicles, semi-trailer tractors, workshop vehicles or campers.

4.2.12 Minimum rear axle load with running gear for application D

On vehicles with "Suspension for application D" (PR no. GC5), for example, for drinks transporters, camper bodies or similar, the following minimum rear axle loads shall be observed in all driving conditions:

Total weight	Minimum rear axle load
3.5 t	1200 kg
3.88 t	1,850 kg
5 t	2250 kg

You will find detailed information on the new suspension packages in the brochure "The new Crafter running gear packages for special requirements" (see chapter 4.2.1 "General information").

4.3 Limit values for body-in-white

4.3.1 Modifications to the body-in-white

See chapter 7 "Modifications to base vehicle" and chapter 7.2 "Body-in-white / body".

- Interventions in the cross-member structure from the front end to the rear of the B-pillar are not allowed.
- Modifications on the rear gate and in the roof area are not allowed (see 7.2.7 "Sidewall, windows, doors and lids").
- If modifications are made to the supporting structure, the replacement rigidity of the structure fitted by the body builder shall correspond overall with at least that of the production vehicle.
- The clearances for the fuel filler neck as well as for the tank and fuel lines shall be maintained.
- Neither drilling nor welding is permitted on the A and B-pillars.
- If modifications are made to the sidewall on the panel van or window van, replacement rigidity corresponding with the base vehicle shall be provided.
- If superstructures are fitted on the cab of base vehicles, a tank sender protector will be necessary depending on the body. See 7.3.1 "Fuel system".

4.3.2 Vehicle frame limit values

If the wheelbase is modified and the frame is lengthened, the material of the extension piece shall correspond with the production chassis frame in terms of quality and dimensions (see 8.1 "Assembly frame").

Vehicle name	Approve	Material
Crafter	Chassis	H240 LA or S235 JRG

4.3.3 Lowering of wheel housing

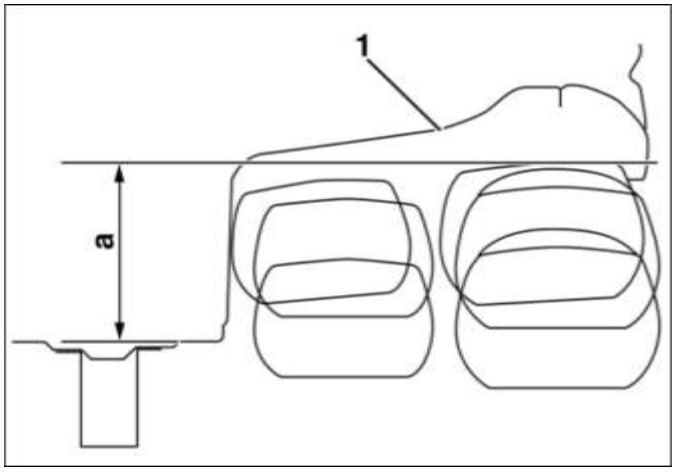

Clearance requirements

[1] Contour of production wheel housing of panel van

a Minimum distance from frame flange to wheel housing contour

Information

The minimum distance of the wheel housing is measured from the floor of the panel van to the lowest point on the wheel housing contour.

Gross vehicle weight rating [t]	Tyres	Dimension a [mm]
3.5 (straight frame longitudinal member)	205/75R16	260
	235/65R16	260
4.6 in conjunction with PR no. 1P0/ 1P3/1P6/VZ0 (frame longitudinal member, tapered)	285/65R16	260
	2 x 195/75R16	200
	2 x 205/75R16	210
4.6 – 5 (frame longitudinal member, tapered)	285/65R16	260
	2 x 195/75R16	175
	2 x 205/75R16	185
3.5 (heavy-duty suspension version)	225/75R16	200
5.0 (heavy-duty suspension version)	205/75R16	190

Information

Further information can be found in chapter 7.2.8 “Wings and wheel housings””.

4.3.4 Wheel housing minimum dimensions chassis

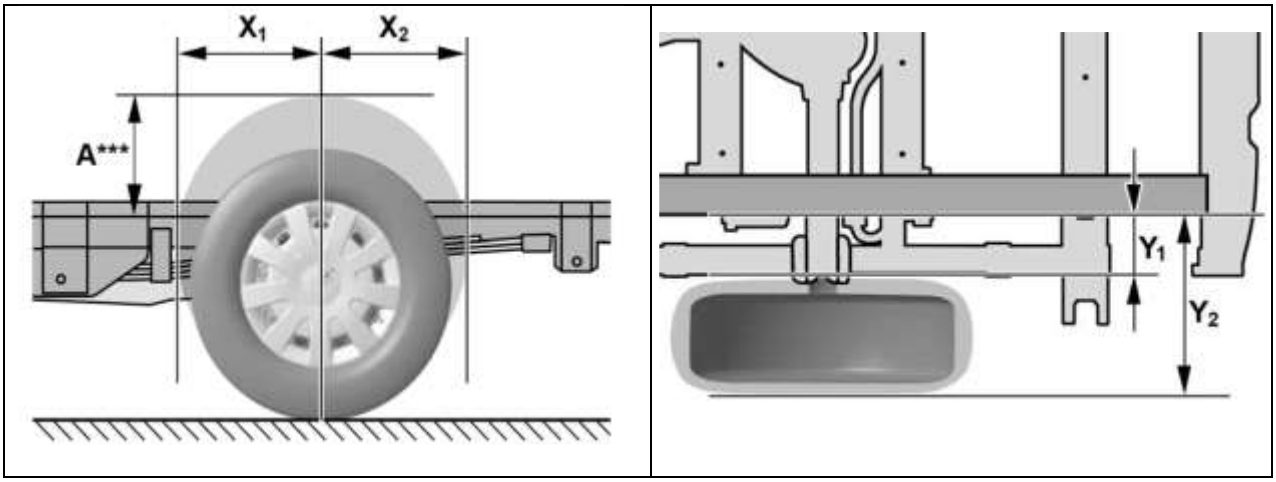

Limit values for wheel housing on chassis vehicle

Gross vehicle weight rating [t]	Tyres	Dimensions [mm]				
		X1	X2	Y1	Y2**	A***
8.5	205/75R16	410	410	195	520	260
3.5	235/65R16	410	410	195	520	260
4.6	285/65R16	445	445	245	635	260
4.6 – 5.0*	2 x 195/75R16	405	405	120	630	225
	2 x 205/75R16	410	410	115	635	235
3.5 (heavy-duty suspension version)	225/75R16	430	430	195	510	200
5.0 (heavy-duty suspension version)*	2 x 205/75R16	410	410	115	638	190

* With twin tyres, Y_1 is used for the inside of the inner wheel and Y_2 for the outside of the outer wheel.

** With maximum wheel housing panelling up to wheel centre.

*** Minimum distance from frame flange to wheel housing contour.

The minimum distance A of the wheel housing is measured from the flange between the upper and lower chord of the frame longitudinal member to the lowest point on the wheel housing contour.
Dimensions Y_1 and Y_2 are measured from the outside edge of the frame flange on the frame longitudinal member.

Information

Further information can be found in
chapter 7.2.8 “Wings and wheel housings””.

4.3.5 Vehicle overhang

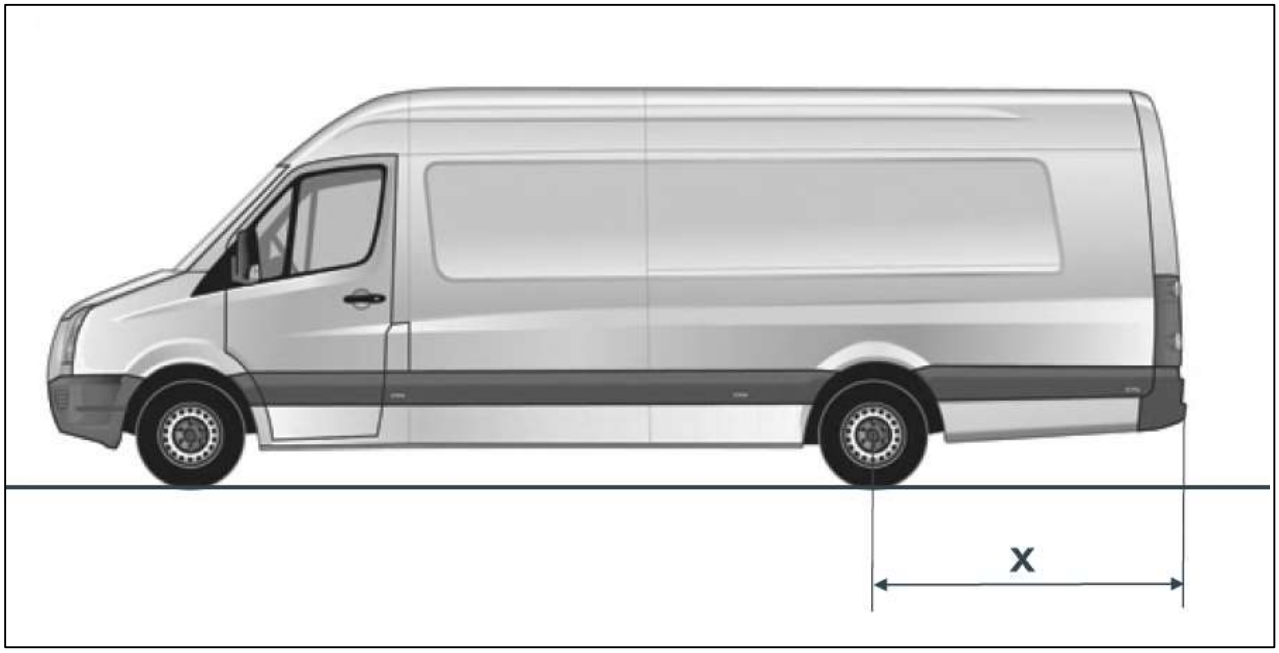

Max. overhang length

x-vehicle overhang

The maximum vehicle overhang while observing the gross axle weight rating and centre of gravity position is:

Maximum overhang lengths	
Wheelbase l [mm]	**Overhang length x [mm]**
3250	1650
3665	1850
4325	2200

Maximum trailer weights when towing bracket position is moved

Gross vehicle weight rating [t]	**Wheelbase [mm]**	**Displacement of towing bracket position compared with standard version [mm]**				
		0 - 200	**200 - 500**	**500 - 600**	**600 - 700**	**> 700**
3.5	3250	2,800 kg	2500 kg	2,000 kg*	1,500 kg*	* + **
	3665	3500 kg	3000 kg	2,500 kg*	2,000 kg*	* +**
	4325	3500 kg	3000 kg	2,500 kg*	2,000 kg*	* +**
5.0	3665	3500 kg	3500 kg	3,000 kg*	2,500 kg*	* +**
	4325	3500 kg	3500 kg	3,000 kg*	2,500 kg*	* +**

* If the towing bracket position is moved > 200 mm compared with the standard version, the trailer stabilisation shall be deactivated.

** If the towing bracket position is moved > 700 mm compared with the standard version, we recommend that you seek advice from the responsible department

(see 2.2 "Body builder guidelines, consulting").

4.3.6 Attachment to the frame

- The attachment to the frame shall be done according to section 7.2.2 “Attachment to the frame”.
- The body shall be attached to the base vehicle via the body brackets fitted at the factory or via additional body brackets (see 8.1.4 “Attachment to the frame”).
- Two screws shall be used on each body bracket to attach the body.

4.3.7 Wheelbase modifications - free body lengths

- Wheelbase modifications are not permitted with all-wheel vehicles.
- With 4x2 vehicles (rear-wheel drive), wheelbase changes are permitted under limited circumstances.
- Wheelbase changes by moving the rear axle are not permitted.
- Modifications to the frame shall be made according to 7.2 “Body-in-white/body”.
- The information and notes listed under chapter 7.2.5 “Wheelbase modifications” must be observed.
- Country-specific laws and regulations are to be observed!
- Frame cuts shall be avoided in the vicinity of frame inserts.
- The offset between the assembly frame cut area to the cut area shall be > 100 mm.
- The end of the exhaust pipe shall not be directed against vehicle components (e.g tyres) after wheelbase modifications.
- Further information is available under 7.2.5.2 “Recommended frame cutting areas”.

4.3.8 Vehicle roof/roof load

Maximum roof loads			
Panel van **[kg]** **LH1**	**Panel van with high roof** **[kg]** **LH2**	**Panel van with extra-high roof** **[kg]** **LH3**	**Cab / Double cab** **[kg]**
300	150	0	100

Roof crossrails or weight-bearing parts are not allowed to be removed without replacement or to be damaged.
The connection between the cross strut and the side wall shall be flexurally rigid (see 7.2.11.3 "Number of roof cross struts").

Wheelbase [mm]	**Required number**
3250	≥ 4 cross struts
3665	≥ 5 cross struts
4325	≥ 6 cross struts

Cross struts	**Position**
1	Behind the front doors (B-pillar)
2	In the middle of the load compartment sliding door (between B and C-pillar)
3	In the centre of the vehicle behind the load compartment sliding door (C-pillar)
4-6	Between C-pillar and rear of the vehicle (rear pillar)

Roof height increase [mm]	**Moment of inertia Ix per cross strut [mm^4]**
≤ 250	≥ 40000
≤ 400	≥ 65000
≤ 550	≥ 86000

4.4 SCR system

4.4.1 SCR system (EUROV – 5-cylinder variants)

The SCR system (selective catalytic reduction = system for reducing nitrogen oxides with AdBlue additive) consists of an AdBlue® tank, lines and a metering valve, and forms an optimised electrical-hydraulic unit. The location of the AdBlue® tank, the heated lines and their relative position to the vehicle shall not be changed.

For enclosed bodies (panel van/window van) there is only one install position for all wheelbases.
For open bodies (chassis/double cab) there are different install positions for each wheelbase (the distance to the rear axle is always the same).

Prerequisites for chassis and double cab:

- Filling of tank shall be guaranteed.
- For panel and camper bodies, extending the filler neck to a max. 300 mm is permitted. The leakproofness is presupposed. The specified capacities shall hereby not be exceeded.
- Along with the filler neck, the pump unit and the metering unit shall be accessible for repairs.

For open bodies where there is a location conflict, under certain circumstances it is possible to relocate the AdBlue® tank to the left side on the vehicle (not for short wheelbase).

Information

Detailed information is available from Volkswagen Commercial Vehicles upon request. Please contact the hotline of the Conversion Portal, your direct point of contact at the body manufacturer support or the responsible importer (see 2.1.1 “Contact in Germany” and 2.1.2 “International contact”).

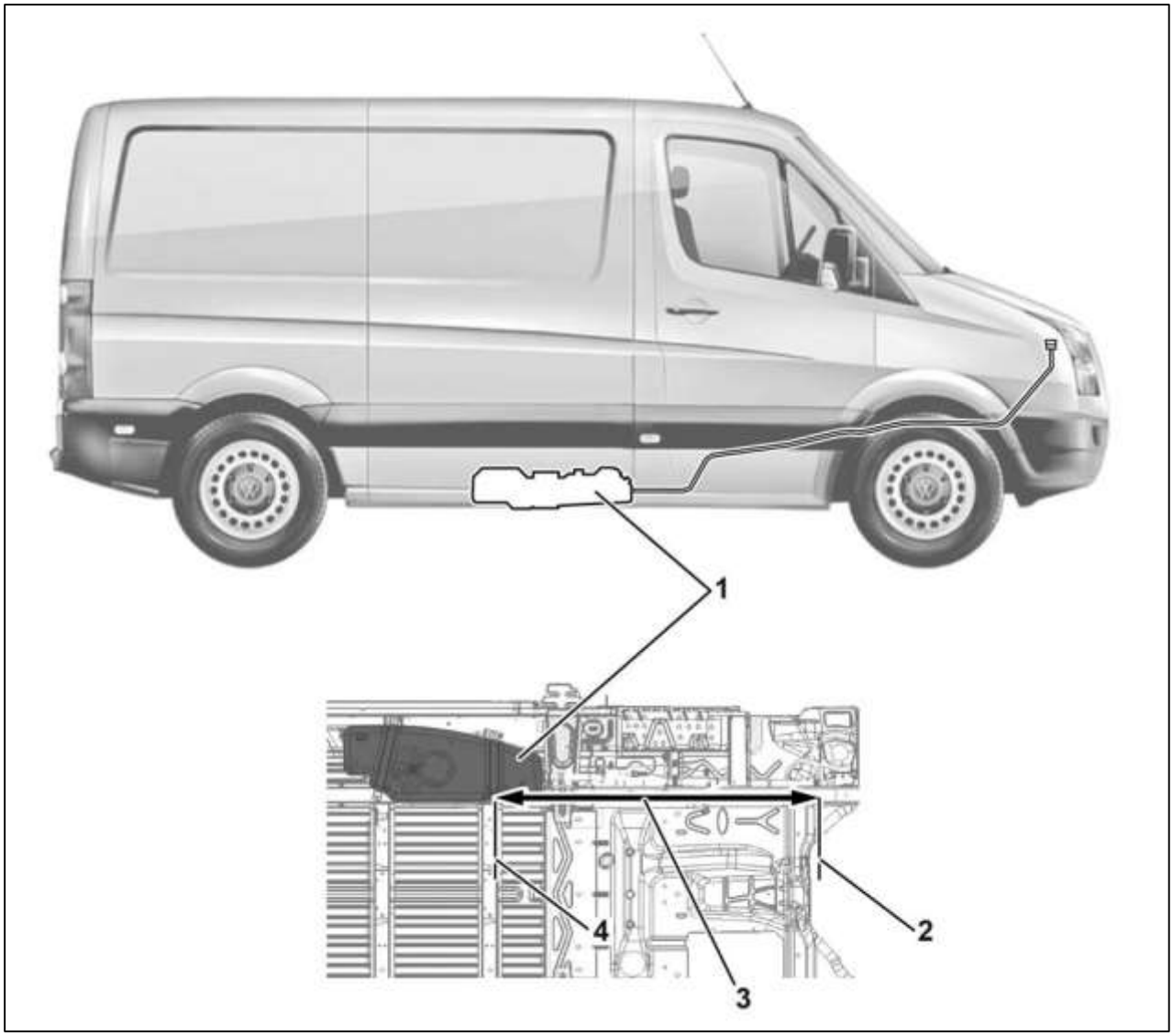

Crafter AdBlue® tank system, panel van

[1] AdBlue® tank

[2] Vehicle reference point centre of front axle

[3] Dimension for R1, R2, R3

[4] First contact point of front bracket

Body length A1 to A4 = 1540 mm

The distance measurement "3" from the centre of the front axle to the first contact point of the AdBlue® tank to the front bracket is 1540 mm for all 4 wheelbases.

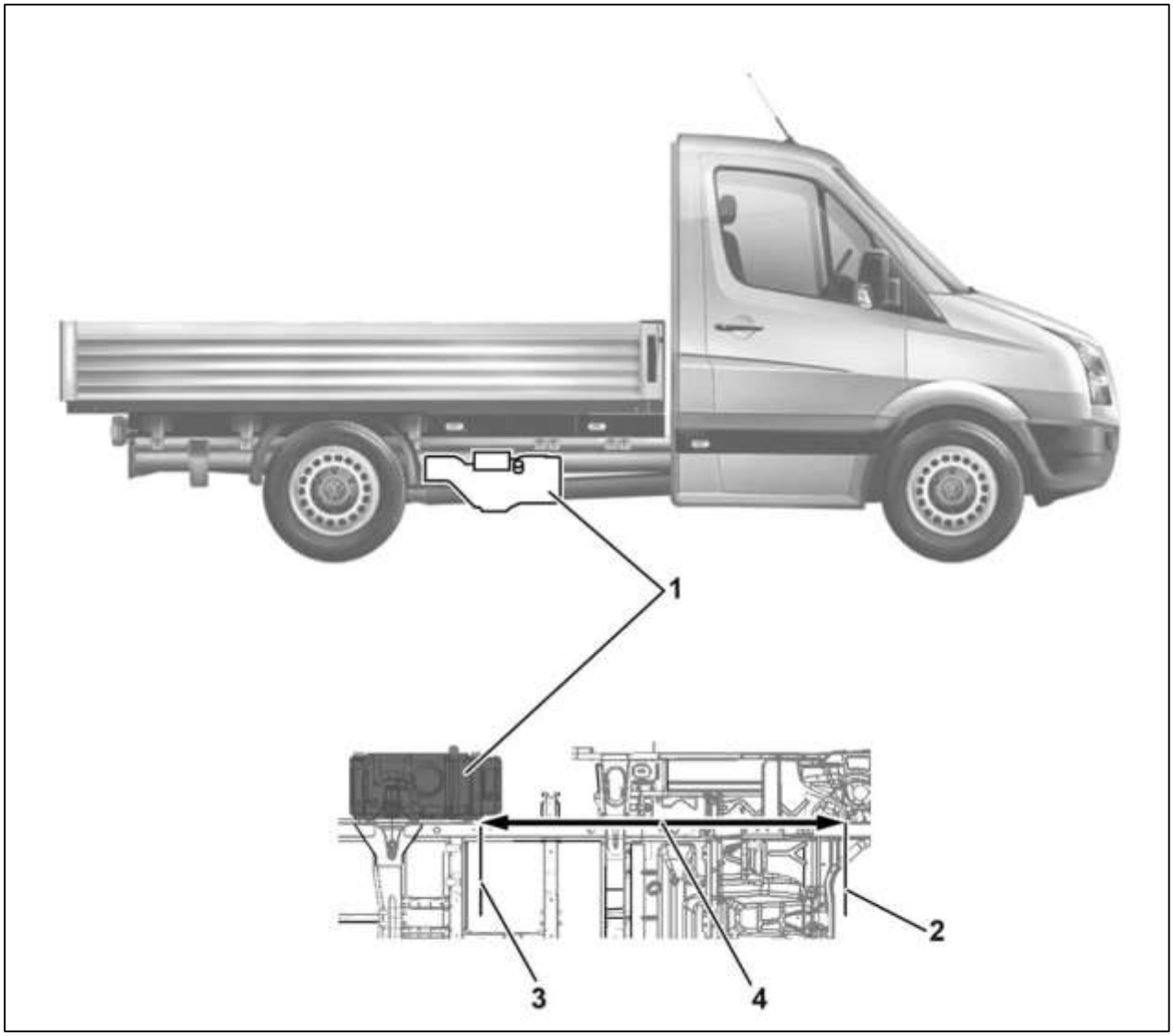

Crafter AdBlue® tank system location in front of rear axle, chassis

[1] AdBlue® tank

[2] Vehicle reference point centre of front axle

[3] First contact point of front bracket 4 Dimension for R1, R2 and R3

The distance measurement "4" from the centre of the front axle to the first contact point of the AdBlue® tank to the front bracket is:

- 1952 mm for the first wheelbase R1
- 2297 mm for the medium wheelbase R2
- 3027 mm for the long wheelbase R3

4.4.2 SCR system (EURO VI – 4-cylinder variants)

To meet EURO VI emissions regulations for diesel engines, engine variants are available ex-works with performance levels of 84 kW and 120 kW, with SCR system.

The SCR (Selective Catalytic Reduction) catalytic converter is installed in Blue TDI models amongst others, and has the function of converting nitrous oxide (NO_x) constituents of the exhaust into nitrogen and water. This conversion is undertaken using AdBlue®, a synthetically manufactured, aqueous reducing agent. AdBlue® additive comprises 32.5 percent high-purity urea and demineralised water. AdBlue® is not mixed with the fuel, but carried in a separate tank.
From there, it is injected continuously into the exhaust gas line in front of the SCR catalytic converter. It reacts with the nitrous oxides in the SCR catalytic converter and is split into nitrogen and water. The dose depends on the exhaust gas mass flow; the engine management system is sent information by an NO_x sensor behind the SCR catalytic converter and ensures precise dosing. The aqueous additive AdBlue® is non-poisonous, odourless and water-soluble.

The kerb weight of vehicles with an exhaust system and SCR system has been increased by 33 kg compared to vehicles with an exhaust system without SCR system.

4.4.2.1 Installation position of the AdBlue® tank in the vehicle:

In both open bodies (platform, chassis) and closed bodies (panel/window), and all wheelbases, the AdBlue® tank is fitted uniformly at the front right of the engine compartment in the direction of travel, directly behind the bumper. The metering line is routed on the right in the wheel housing.

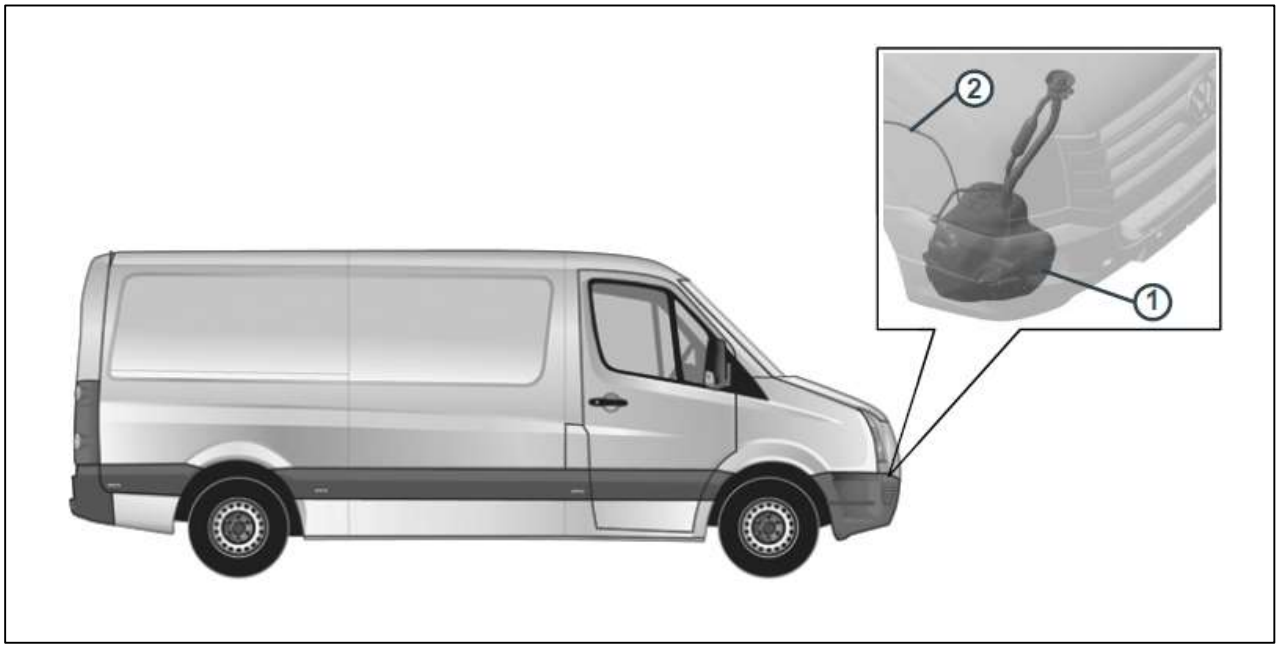

Installation position of the AdBlue® tank in the vehicle

[1] AdBlue® tank

[2] AdBlue® metering line

The SCR system consists of an AdBlue® tank, lines and a metering valve and forms an optimised electrical-hydraulic unit. The location of the tank, the heated metering line and their relative position to the vehicle shall not be changed (see chapter 7.3.3. Exhaust system).

4.4.2.2 Filling the AdBlue® tank

The filling opening of the AdBlue tank is located at the front in the engine compartment. The tank volume of the AdBlue® tank is approx. 17 litres.

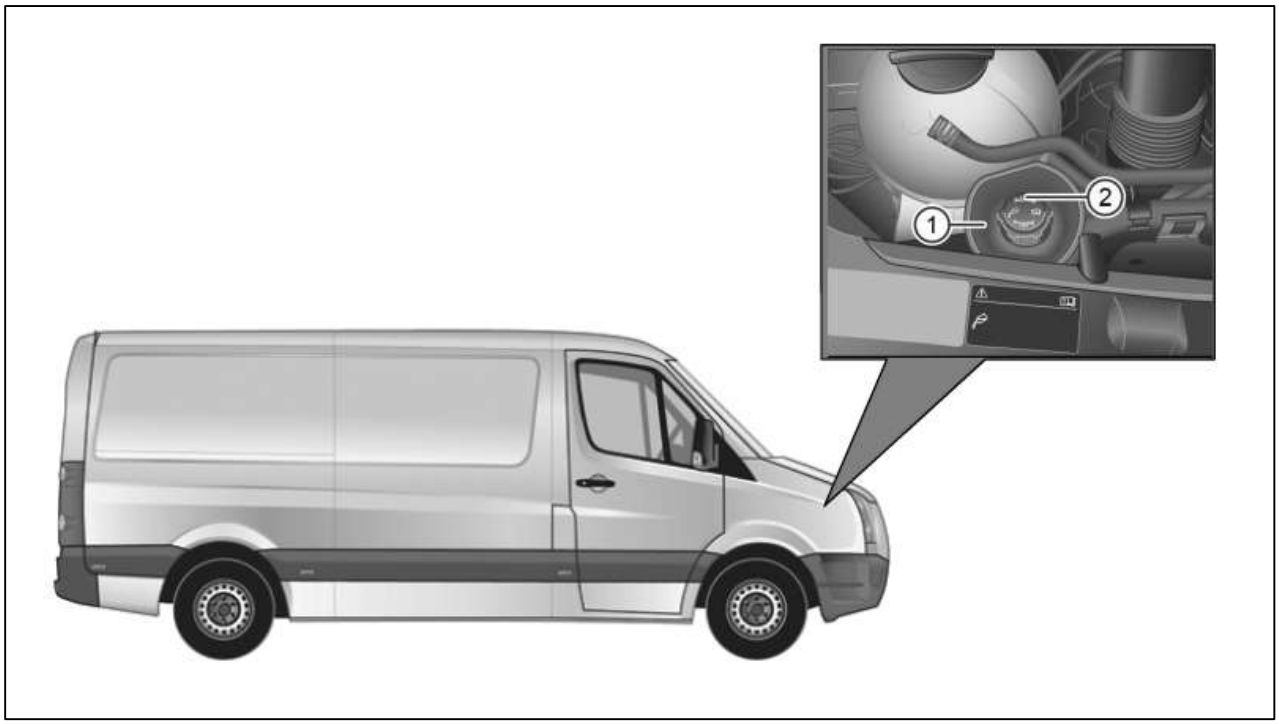

Filling opening of the AdBlue® tank in the engine compartment

[1] AdBlue® tank filler neck

[2] Tank filler neck cap

Practical note

Once a particular residual range is reached, the display on the instrument cluster displays a reminder to top up the AdBlue®.

AdBlue® consumption depends on the individual driving style, and can be up to 1% of fuel consumption.

When the AdBlue® tank is empty, the vehicle can only be driven at reduced power and lower engine torque.

If topping up AdBlue® while the residual range display is active, always add the minimum replenishment amount of 6 litres. An adequate amount of AdBlue® shall be replenished when the residual range reaches about 1000 km, if not sooner.

Never run the AdBlue® tank empty.

Practical note

AdBlue® attacks surfaces such as painted surfaces, aluminium, plastics, clothing and carpets. If AdBlue® is spilled, wipe it up as quickly as possible with a damp cloth and plenty of cold water. Remove crystallised AdBlue with warm water and a sponge.

More information about AdBlue® is available in ISO standards ISO 22241-1 to 4.

Practical note

To ensure the purity of AdBlue®, never reuse AdBlue® that has been extracted from the AdBlue® tank.

Comply with the laws and regulations of the country in question regarding correct storage and disposal.

Information

More information and safety instructions for the SCR system can be found in the owner's manual for your vehicle and the workshop manuals of Volkswagen AG on the Internet:
http://erwin.volkswagen.de/erwin/showHome.do

4.5 Limit values for engine peripherals/powertrain

4.5.1 Fuel system

Modifications to the fuel system are not permitted (see 7.3.1 "Fuel system").

4.5.2 Modifications to engine/powertrain components/exhaust system

- No modifications to the engine air intake system are permitted.
- Modifications to the drive shaft lengths shall be performed by a company qualified in drive shaft manufacture.
- Subsequent solutions for engine speed regulation other than those available as optional equipment are not possible.
- Modifications to the exhaust system, in particular in the area of the components for exhaust gas treatment (diesel particulate filter, catalytic converter, lambda probe etc.), are not permitted (see 4.4 SCR system).

4.5.3 Engine cooling

Modifications to the cooling system (radiator, radiator grille, air ducts, etc.) are not permitted (see chapter 7.3.3 "Engine cooling system").

Keep the cross-sections of the cooling air intakes clear.

These are:

- Front grille (related to radiator and condenser) at least 11 dm^2
- Bumper aperture (charge air intake) at least 7 dm^2

4.6 Limit values for interior

4.6.1 Modifications in the area of airbags and belt tensioners

Warning note

Modifications to the airbag system and the belt tensioner system are not permitted.

Modifications or incorrectly performed work on a restraint system (seat belt and seat belt anchors, belt tensioners or airbags) or its wiring could lead to the restraint system no longer working correctly. This means that, for example, airbags or belt tensioners could be deployed inadvertently or fail in accidents even though the delay required for deployment has passed.

- Modifications on and in the area of airbag components and the airbag sensors are not permitted.
- Later modifications to the headliner or its fastenings are permitted if the vehicle is equipped with a window bag.
- The interior fittings shall be designed so that the airbag deployment areas are left unobstructed (see 7.4.2 "Safety equipment").
- Modifications in the area of the airbag control unit are not permitted (see 7.4.2.1 "Airbag control unit and sensors").

Further information can be found under "Modifications to the base vehicle" (see 7.4.2 "Safety equipment").

4.6.2 Modifications to seats

Warning note

Modifications to the seat system or attachment of seats on the wheel housing are not permitted. Otherwise the seats could be torn out of the anchoring points in the event of an accident.

For more information, refer to 7.4.3 "Standard seats" and 8.3 "Modifications to interior".
Rear seats with 2 or 3-point seat belts differing from the standard seats must meet the requirements of EC Directive 76/115/EEC and 74/408/EEC.

4.7 Limit values for electrics/electronics

See chapter 6 “Electrics/electronics”.

4.7.1 Vehicle marker and side marker lights

Please note that in the completed (converted) vehicle, it is necessary to comply with the add-on regulations and dimensions of all technical lighting equipment acc. to ECE regulation 48 (see following table). According to this, parking lights are specified for vehicles wider than 2.10 m and side marker lights for vehicles longer than 6.00 m.

Applicable to all vehicle types:

ECE regulation	Lighting equipment	Vehicle dimensions	Remark
ECE-R 48, 6.12	Parking lights	Permitted for vehicle dimensions: Width: ≤2,000 mm and Length: ≤ 6,000 mm	The parking light is not prescribed, but is permitted. It is not permitted in longer and wider vehicles, and shall be deactivated if necessary.
ECE-R 48, 6.13	End-outline marker lights	Permitted for vehicles with a width ≥ 1800 mm and ≤ 2100 mm Prescribed for vehicles with a width > 2,100 mm	Applies for all vehicles.
ECE-R 48, 6.18	Side marker lights	Prescribed for vehicles with a length > 6,000 mm	Permitted for other vehicles.

4.7.2 Retrofitting electrical devices

All installed electrical devices must be checked acc. to the EC regulation ECE-R 10 and shall bear the “e” mark.

Practical note

There can be a loss in comfort in individual cases.

4.7.3 Mobile communication systems

The maximum transmission power (PEAK) at the base of the aerial shall not exceed the following values.
Country-specific laws on maximum legitimate transmission powers shall be observed.

Frequency range	Maximum transmitting power [W]
Short wave (f < 50 MHz)	100
4 m frequency band	30
2 m frequency band	50
Trunked radio/TETRA	35
70 cm frequency band	35
GSM 900/AMPS	10
GSM 1800	10
UMTS/LTE	10

4.7.4 CAN BUS

Interventions in the CAN bus and connected components are not permitted.
Data available via the CAN bus can be accessed via the parametrisable special module (PR no. UF1, UF2, UF4)
(see 6.10 “Electrical interface for external use - parametrisable special module (PSM)”)

4.7.5 Electronic Stability Control

Warning note

The location, position and fastenings of the ESC yaw rate sensor cannot be modified. Modifications to wiring and ESC components are not permitted. Otherwise the ESC system might no longer function correctly. There is a greater risk of accidents particularly if you are driving at the limit.

4.8 Limit values of ancillaries

If ancillaries (e.g. additional air conditioner compressors, pumps, etc.) are retrofitted, the following shall be observed:

- The function of vehicle components is not impaired.
- The unrestricted movement of vehicle components remains assured in any driving situation.

4.9 Limit values of add-ons

- Side protection equipment is required by EC Directive 89/297/EEC on vehicles from 3.5 t.
- An underbody impact guard is required if:
  + the distance from the end of the vehicle to the rear axle is more than 1000 mm
  + The distance between the road and the chassis or main components of the body over the whole width of the vehicle is more than 550 mm while the vehicle is unloaded.
- Specifications on the maximum lifting capacity can be found in section 7.6.7.3 “Tail lift mounting”. Attachment in accordance with section 7.6.7 “Tail lift” is required in this case.

4.10 Body limit values

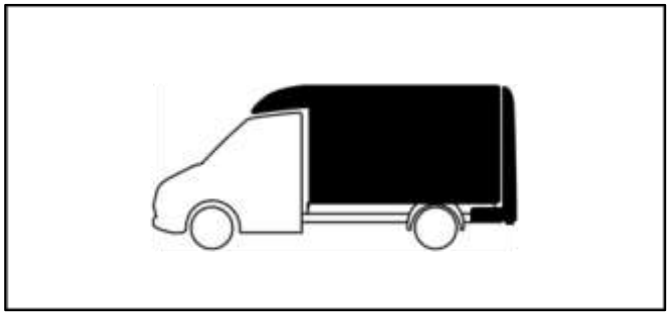

See chapter 8 “Implementations of bodies”.

Practical note

The standard tank cap is not allowed to be removed or covered with a part which creates a block (see 8.13 “Campers”).

Practical note

The minimum distance between the cab and separate body shall be > 50 mm.

Practical note

The minimum distance between the rear edge of the door and integrated body shall be > 20 mm. Otherwise, in an accident, the rear edge of the door and the body could come into contact and in extreme cases result in the door being jammed.

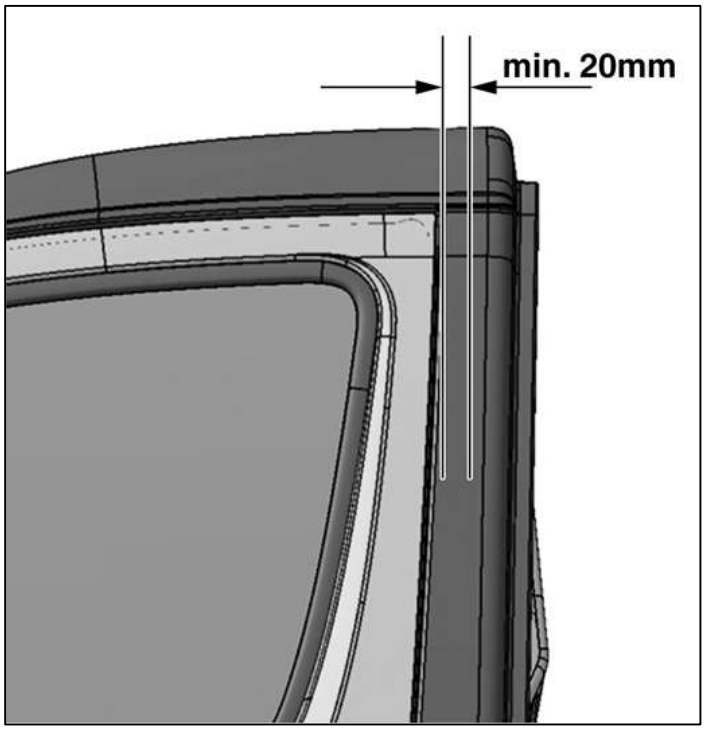

Minimum distance between rear edge of door and integrated body

4.10.1 Assembly frame

Required section modulus for the assembly frame Wx1 [cm³]:			
Version	**Platform/panel van**	**Panel/elevated work platform**	**Crane**
3.5 t	17[2]	30	40
4.6 t and 5.0 t	30[2]	40	40

1 The required section modulus for the assembly frame is to be provided by each individual longitudinal member of the assembly frame.

2 Up to max. standard wheelbase +10%.

Information

If necessary, observe differing specifications, see chapter 8.6.2 “Platform bodies” and chapter 8.9 “Tipper bodies”.

Material qualities for specified assembly frame made of steel:

Material	**Ultimate yield strength** [N / mm2]	**Tensile strength** [N / mm2]
H240LA (DIN EN 10268-1.0480)	260-340	≥ 240
S235JRG2 (DIN EN 10025-1.0038)	≥ 235	340-510

Further information can be found in chapter 8 “Implementations of bodies”.

5 Prevention of damage

Practical note

The prevention of accident regulations shall be observed during work on the vehicle.

Practical note

The national guidelines and laws shall be observed.

5.1 Brake hoses/cables and lines

Plastic lines, brake hoses and brake cables shall be covered and, if necessary, removed before welding, drilling, sanding and working with cutting discs.

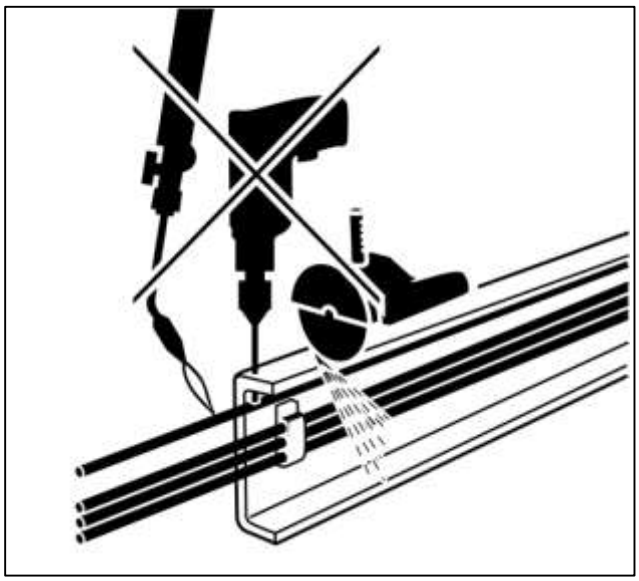

After fitting compressed-air lines and hydraulic lines, the system shall be checked for pressure loss and leaks.
No other lines are allowed to be fastened to brake hoses.
Lines shall be protected against heat with suitable insulation.

Warning note

Work performed improperly on brake hoses and cables can impair their function. This can lead to a failure of components or safety-relevant parts.

5.2 Welding work

Warning note

Welding in the area of the restraint systems (airbag or belts) can lead to these systems ceasing to function properly. Welding in the area of restraint systems is therefore prohibited.

Warning note

Incorrectly undertaken welding work can lead to a failure of safety-relevant components, and thus cause accidents. Therefore, the following safety measures must be complied with when welding work is performed.

- Welding work on the chassis is only allowed to be carried out by specialist personnel.
- Before starting welding work, it is necessary to remove components which might contain gases representing a fire or explosion hazard, e.g. fuel system, or else to protect them with a fireproof cover against airborne sparks. Gas containers which could be damaged by airborne sparks during welding work must be removed.
- Before welding work starts in the area of seat belts, airbag sensors or the airbag control unit, the components must be removed for the duration of the work. See chapter 7.4 "Interior" for important information on handling, transporting and storing airbag units.
- Before starting welding work, cover springs and spring bellows to protect them against weld spatter. Springs are not allowed to be touched with welding electrodes or welding tongs.
- No welding is allowed on mechanical units such as the engine, gearbox, axles.
- Remove and cover the battery positive and negative terminal clamps.
- Directly connect the earth clamp of the welding machine to the part to be welded. The earth clamp is not allowed to be connected to mechanical units such as the engine, gearbox, axles.
- The housings of electronic components (e.g. control units) and electrical wiring are not allowed to be touched with the welding electrode or earth clamp of the welding machine.
- The electrodes are only allowed to be used with direct current via the positive terminal for welding. Always weld from bottom towards the top.
- The current rating is allowed to be a maximum of 40 A per mm of electrode diameter.

Only use well dried electrodes (diameter 2.5 mm) with lime-based sheath.

- Shielding gas welding is permitted.
- Only welding wire with a thickness of between 1 and 1.2 mm is allowed to be used.
- The welding material shall have at least the same yield strength and tensile strength as the material to be welded.
- Hole welding is only permitted in the vertical webs of the frame longitudinal member.
- In order to avoid notch effects due to fusion penetration, weld seams shall be ground and reinforced with angle brackets.
- Weld seams in bend radii shall be avoided.
- The distance of weld seams from outer edges shall be at least 15 mm.

Information

You will find further information on welding work in the chapters 3.7 “Bolted and welded connections”, 7 “Modifications to the base vehicle”, 7.2.1 “General information on body-in-white/bodywork” and the “Electronic Repair and Workshop Information” (erWin) of Volkswagen AG.

5.3 Corrosion protection measures

Following conversion and installation work on the vehicle, surface and corrosion protection shall be applied to the affected points.

Practical note

Only the corrosion protection agents tested and approved by Volkswagen are allowed to be used for all corrosion protection measures.

5.3.1 Planning measures

Corrosion protection should be taken into account in the planning and design in the form of a suitable material selection and component design.

Information

If two different metallic materials are connected together by an electrolyte (e.g. moisture from the air) then this will give rise to a galvanic connection. The result will be electrochemical corrosion, and the less noble metal will suffer damage. The electrochemical corrosion will be all the greater the further apart the metals in question are in the electrochemical series. Therefore, the components must have a suitable treatment or insulation applied to them in order to prevent electrochemical corrosion, or the corrosion must be kept at a low level by a suitable choice of materials.

Avoidance of contact corrosion by electrical insulation

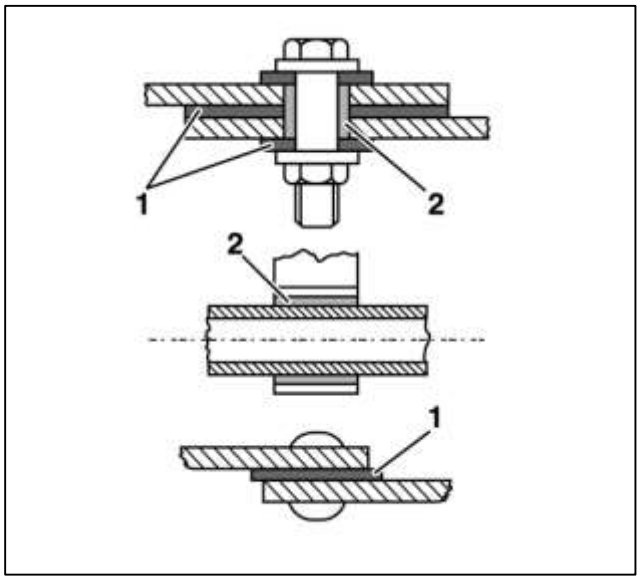

Avoiding contact corrosion

1 Insulating washer

2 Insulating sleeve

Contact corrosion can be avoided by using electrical insulation such as washers, sleeves or tubes.
Avoid welding work on inaccessible cavities.

5.3.2 Component design measures

Design measures, in particular in the design of connections between the same or different materials, can be used for providing corrosion protection:
Corners, edges, beads and folds represent locations where dirt and moisture can collect.
Suitable surfaces, drains and the avoidance of gaps at component connections represent means by which corrosion can be counteracted by design measures.

Gaps at welded connections as a feature of the design, and how to avoid them

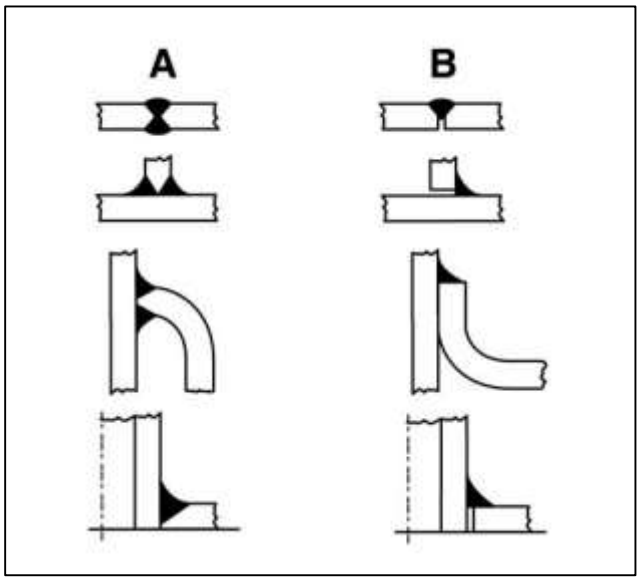

Application examples of welded connections

A = Favourable (welded-through)	B = Unfavourable (gap)

5.3.3 Coating measures

By applying protective coatings (e.g. galvanizing, painting or high-temperature zinc application), it is possible to protect the vehicle against corrosion (see chapter 5.4 "Paint work / corrosion protection measures").

5.3.4 After all work on the vehicle

- Remove drilling chips
- Deburr edges
- Remove scorched paint and thoroughly prepare the surfaces for painting
- Apply a primer to all bare metal parts, and paint them
- Apply a wax-based corrosion protection agent to cavities
- Carry out corrosion protection measures on the underbody and frame components

5.4 Painting/corrosion prevention

Practical note

The permitted object temperature for paint drying is maximum 60 °C, and the drying time is 30 minutes. Higher temperatures could cause damage to the control units or other components.

Any damage to paintwork or corrosion protection caused by the body builder shall be repaired by the body builder.

The following shall be noted:

- The quality requirements of Volkswagen for the first paint coat and repair paint shall be observed.
- Only the materials tested and approved by Volkswagen or equivalent suitable materials are allowed to be used for all painting and corrosion protection work.
- The coat thicknesses specified at the factory for the individual paint coats shall be observed by the body builder.
- When painting over existing paintwork, the paints shall be compatible.

Information

Any Volkswagen customer service department can provide information on the paint materials, coat thicknesses and Volkswagen colour codes used at the factory.

The following areas shall be covered before painting:

- Disc brakes
- Brake hoses
- Transfer unit of the handbrake
- Contact surfaces between the wheel rims and wheel hubs
- Contact surfaces of the wheel nuts/wheel bolts
- Brake fluid reservoir
- Bleeder connections on gearbox, axles etc.
- Sealing surfaces
- Windows
- Door locks
- Door arresters in the hinges of the rear pivoting door
- Door arresters and opening stops in the centre guide rails
- Contact surfaces in the guide rails for the sliding doors
- Moving parts of the sliding door carriages
- Airbags and seat belts
- Parktronic sensors (see 6.13 “Parktronic”)

Information

You will find further information on painting and corrosion-protection work in the “Paintwork manual” at https://erwin.volkswagen.de/.

5.5 Tow-starting and towing

Practical note

Before tow-starting or towing the vehicle, please read the chapter "Towing" in the detailed Owner's Manual.

5.6 Storage and delivery of the vehicle

5.6.1 Storage

To prevent damage during storage of vehicles, we recommend servicing and storing them according to the manufacturers specifications (see 3.9 “Maintenance and repair”)

5.6.2 Delivery

To avoid damage to the vehicle and rectify any existing damage, we recommend checking all vehicle functions and for perfect condition before delivery (see 3.9.3.1 “Check of whole vehicle”).

6 Electric/electronics

6.1 General notes

Warning note

Incorrect interventions in electronic components and their software may result in these no longer functioning correctly. Due to the networking of electronics, systems that were not modified can be affected.

Malfunctions to the electronics can significantly impair the operational safety of your vehicle.

Have work on or modifications to electronic components performed by a qualified specialist workshop which has the necessary specialist knowledge and tools for performing the necessary work.

Volkswagen recommends Volkswagen customer services for this purpose.

Service by a qualified specialist workshop is essential, in particular for work on safety-relevant systems.

Some safety systems only operate when the engine is running. Therefore, do not switch the engine off when driving.

Practical note

If additional electrical equipment is installed, a positive overall charging balance shall be ensured (see 6.4.6 “Retrofitting electrical devices”).

When the engine is running, the terminals on the batteries are not allowed to be loosened or disconnected.

Batteries are only allowed to be charged with a quick charger if the positive and negative terminals are disconnected from the vehicle electrical system.

Please note:

- For bodies and conversions with electromagnetic switching mechanisms (such as relays, magnetic switches, contactors and solenoid valves), these components must be equipped with integrated protective diodes (free-wheel diodes/anti-surge diodes), in order to exclude interference voltage peaks from the vehicle electrical system and the control units. If no protective diodes are integrated, these must be retrofitted antiparallel to the switch coil.

Information

You can find more information about the protection of control units which are integrated into the vehicle electrical system in the form of interference voltage peaks of electromagnetic bodies and conversions in the supplementary technical information* of the conversion portal.

Please get in touch with us
(see 2.1 "Product and vehicle information for body builders").

* Registration is required!

- Electrical and electronic components shall fulfil the test requirements in accordance with ISO 16750.
- If additional batteries are installed, observe the information under 6.3 "Battery".
- Cables that are laid near to exhaust systems require sleeves that are resistant to high temperatures
- (see chapter 7.1.3.2 "Line routing").
- Cables shall be routed so that there are no areas of abrasion (see 7.1.3.2 "Line routing").
- The batteries shall be disconnected if the vehicle is left standing for longer periods (> 20 days). When re-commissioning the vehicle, make sure that the batteries are charged sufficiently (see 3.9.2 "Maintenance and storage of batteries").
- The Owner's Manual shall be observed.

6.2 Electromagnetic compatibility (EMC)

Electromagnetic compatibility is the property of an electrical system to remain neutral whilst maintaining full functions in the presence of other systems. Active systems in the surrounding area are not disrupted nor is the system itself impaired.
Electrical interference in motor vehicle electrical systems is caused by the different consumers. At Volkswagen, the factory-fitted electric and electronic components have been checked for their electromagnetic compatibility in the vehicle. If modifications are made later on, reductions in comfort (e.g. radio noise) can occur in some cases.
When electrical or electronic systems are retrofitted, their electromagnetic compatibility needs to be checked and certified.
The devices shall possess a type approval in accordance with EU Directive 72/245/EEC in the current version, and shall bear the "e" mark.

The following standards provide information on this:

- CISPR 12
- CISPR 25
- DIN EN 55012
- DIN EN 55025
- ISO 7637
- ISO 10605
- ISO 11451
- ISO 11452
- MBN 10284
- EU Directive 72/245/EEC
- ECE-R 10

6.3 Battery

The main battery is located in the floor area on the left in front of the driver seat.

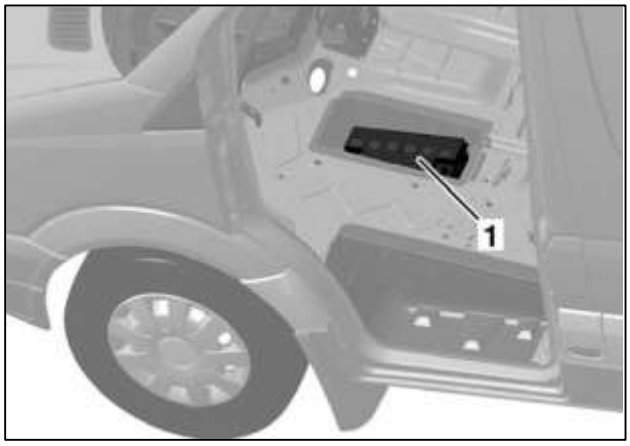

Installation position of main battery

[1] Main battery

The more powerful battery (PR no. NY2 or NY5) shall be used for medium power requirement. An additional battery (PR no. 8FD) shall be used for high power requirement.
Always use an AGM battery (NY5) for vehicles with BlueMotion (PR no. 7L6).

Information

For simplified power supply from the additional battery (PR no. 8FD), a connection point (fuse box) is provided in the driver seat box. It is therefore not necessary to lay additional wiring from the vehicle interior (body builder consumer) to the additional battery in the engine compartment (see 6.4.8 “Power supply”)

*AGM- Absorbent-Glass-Mat-Battery

6.3.1 Subsequent installation of a battery master switch

You can obtain more information on optional equipment from your Volkswagen customer service, the responsible department (see 2.1 “Product and vehicle information for body builders” or 3.10 “Optional equipment”).

6.3.2 Subsequent installation of additional battery

6.3.2.1 Additional battery general information

Practical note

Capacities > 100 Ah is not allowed to be connected directly to the onboard supply since damage could be caused to the base vehicle.

A heavy-duty AGM battery (NY5) should be used in order to obtain optimum performance from the additional used.
When installing an additional battery, make sure that batteries of the same battery type as the starter battery are used (AGM or conventional lead accumulators).
As a result, for optimum performance, use cycle-proof additional batteries (AGM) for vehicles with BlueMotion.

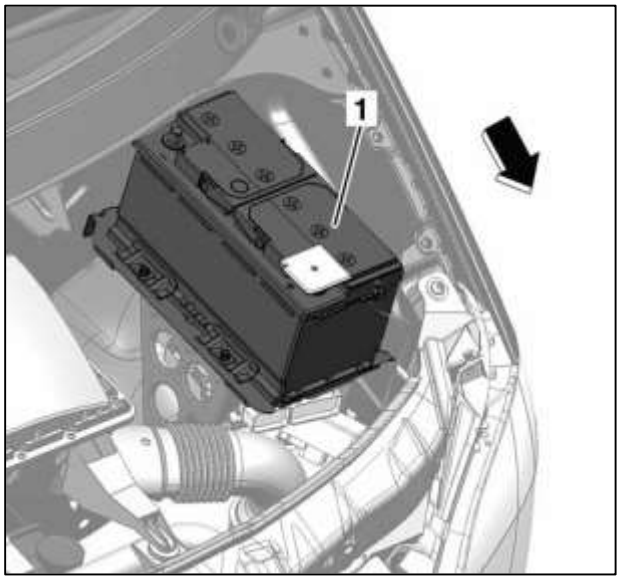

Installation position of additional battery

[1] Additional battery

Arrow direction of travel

An additional battery shall be connected to the vehicle electrical system via a suitable isolation relay and corresponding fuse.
If the additional battery is accommodated in the passenger compartment, sufficiently dimensioned ventilation shall be provided by a central degassing hose to the outside.
The additional battery is only allowed to be used for additional consumers like an auxiliary heater, loading equipment or electrical devices in campers (fridge etc.).

6.3.2.2 Further additional batteries

Practical note

If using one or more second batteries, it is necessary to ensure a positive overall charging balance by selecting a suitable, adequately sized alternator (NY3).

A safety certificate from the responsible department is required for the subsequent installation of further additional batteries (see 2.2 “Body builder guidelines, consulting”).

6.3.3 Maintenance and storage of battery

Batteries shall - even when removed - be checked on a regular basis for voltage drop (self-discharge). Low-maintenance batteries simply mean the acid level does not need to be checked.
You will find information on maintaining and storing batteries in chapter 3.9.2 “Maintenance and storage of batteries”.

6.4 Interfaces

6.4.1 CAN BUS and networking

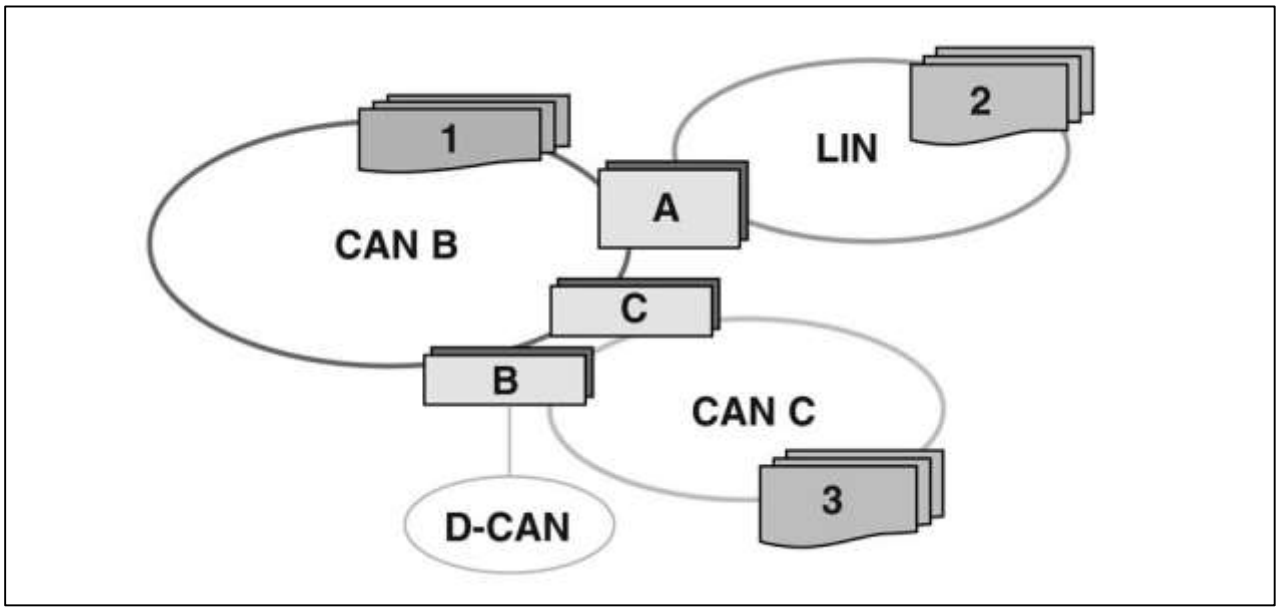

1 **I-CAN = vehicle interior CAN** **(CAN B, 83.333 kbit/s)**	**2** **LIN1 (19.2 kbit/s)**	**3** **M-CAN = engine CAN** **(CAN C, 500 kbit/s)** **D-CAN = diagnosis CAN** **(500 kbit/s)**
Tyre pressure monitoring system1	BDM1	Brake system
Restraint system electronics	LIN alternator1	Column tube module
Roof control unit1		Electronic selector lever module1
Signal recording and control unit		Gearbox control unit1
Door control unit		Engine control unit
Fuel-operated supplementary heater1		Sensor cluster Ax/Ay/wz
Upper control panel		Diagnosis interface
Trailer control unit1		Speedometer1
Parktronic1		
Parameterisable special module1		
Climate control1		
PTC supplementary heater1		
Auxiliary heater water1		
Telephone		

[1] Optional equipment

A ESG*, interface between M-CAN and LIN (ESG = energy control unit (only with 7L6))

B Electronic ignition start switch, interface between I-CAN and M-CAN

C Instrument cluster, interface between I-CAN and M-CAN

Warning note

The CAN BUS is not allowed to be modified due to the networking and internal monitoring of consumers (e.g. by interrupting, extending or "tapping"). Any modification to the wiring harness in terms of length, cross-section or resistance could cause failure of safety-relevant components or result in a loss of comfort.

Internal and external vehicle diagnosis is possible via the OBD diagnostic connection (SAE 1962). Each control unit is self-diagnosis capable and has a fault memory.
Communication with the control unit is possible with the VAS tester and the software that has been developed for this purpose.

Information

Your Volkswagen customer service department can provide you with further information

6.4.2 Electrical cables/fuses

If wiring needs to be re-routed, avoid laying across sharp edges and routing inside excessively narrow cavities and close to moving parts.

Only lead-free PVC jacketed cables with an insulation limit temperature > 105°C are permitted for use. Connections shall be made professionally and water-tight.

The cable shall be dimensioned according to the current drawn and protected by fuses.

The following table is valid for cables with an insulation limit temperature > 105°C

Max. continuous current [A]	Rated current of fuse [A}	Wiring cross section [mm2]
0 - 4.9	5 [1]	0.5
5 - 9.9	10 [1]	1
10 - 18	20 [1]	2.5
19 - 28	30 [1]	4
29 - 35	40 [2]	6
36 - 48	50 [2]	10
49 - 69	70 [2]	16
70 - 98	100	25
99 - 123	125	35
124 - 148	150	50

[1] Shape C; DIN 72581 blade-type connector

[2] Shape E; DIN 72581 blade-type connector

6.4.3 Cable extension

If cables are extended (e.g. as part of a wheelbase extension), the same or a greater wire cross-section shall be used. We recommend using cables in accordance with DIN 72551 or ISO 6722-3. The protective effect of fuse elements shall not be impaired.

All connections shall be made professionally and water-tight in accordance with IP 69k (high-pressure wash safe).
Cables to the ABS sensors on the rear axle are allowed to be extended by max. 2.7 m. The added lines are to be twisted for each sensor with a pitch of 40 ... 58 mm.

6.4.4 Additional circuits

If additional circuits are installed, they shall be safeguarded against the main circuit by means of suitable fuses.
The cables used shall be dimensioned according to the load, and protected against pulling off and the effects of impacts and heat.

Practical note

For subsequent add-ons and conversions to vehicles, it is essential to make sure there are no voltage spikes > 150 V in the vehicle electrical system. In case of a conversion, it is necessary to take suitable measures to ensure this is the case (e.g. by using diodes).

6.4.5 Operating switches

In total, up to eight switch spaces are available for additional special installations and equipment. The PR nos. UF1, UF2 and UF3 include an “electric third-party body” switch.

6.4.6 Retrofitting electrical devices

Note the following for retrofitting additional electrical consumers:

- If the electrical power requirement is higher, the alternators approved by Volkswagen for the vehicle shall be used.
- Do not connect additional alternators to the vehicle electrical system.
- Do not connect any further consumers to occupied fuses.
- No additional cables are allowed to be connected to existing cables (e.g. with insulation-piercing terminals).
- Fuse consumers adequately by means of additional fuses.

All installed electrical devices shall be checked acc. to EU directive 72/245/EEC and shall bear the "e" mark.
Additional electrical consumers shall be connected using the terminal strip for auxiliary consumers (PR no. UF3) that is available from the factory as described in 6.4.8 "Power supply".

Warning note

Incorrect intervention or installations in the vehicle electrics/vehicle electronics can impair their function. This can lead to a failure of components or safety-relevant parts and consequently to accidents or damage to the vehicle

Information

Furthermore interventions in the vehicle electrical system/vehicle electronics can result in invalidation of the warranty/operating permit.

6.4.7 Retrofitting alternator

If additional electrical consumers are retrofitted, the increased power requirement can be met by using more powerful alternators.

The following alternators are available from the factory with PR nos. as optional equipment:

PR number	U [V]	I [A]
8GG	14.3	110
8GU	14.3	140
8GV	14.3	180

If ancillaries are used, the factory fitted auxiliary drives shall be used (see 7.5.3 “Auxiliary drives”).
If other alternators are to be added, the following points should be observed:

- Vehicle parts and their function should not be impaired by the installation of a generator.
- The capacity of the battery and power supplied by the alternator shall be dimensioned sufficiently (see 6.4.7 “Retrofitting alternator”).
- The alternator circuit requires additional fusing (see 6.4.2 “Electrical cables/fuses”).
- The cable cross-section shall be dimensioned according to the current drawn (see 6.4.2 “Electrical cables/fuses”).
- The higher power requirement can make it necessary to replace the starter/alternator warning harness. We recommend Volkswagen genuine parts for this.
- Ensure that electrical wiring is routed correctly (see 6.4.2 “Electrical cables/fuses”).
- The accessibility of the ancillaries installed and simple maintenance possibilities is not allowed to be impaired.
- The necessary air supply and the engine cooling shall not be impaired (see 7.3.3 “Engine cooling”).
- The guidelines of the equipment manufacturer for the compatibility with the base vehicle should be observed.
- The Owner's Manual and the maintenance manual for the ancillaries should be handed over when the vehicle is delivered.

6.4.8 Power supply

Depending on the vehicle build status, it is necessary to differentiate between different variants of power supply for auxiliary consumers. In vehicles without a start/stop system, the power supply uses fastening strip UF3 or the additional battery supply point.

Practical note

If additional electrical consumers are installed, in particular factory-fitted optional equipment that use the additional battery (fuse box in driver seat box), a positive overall charging balance shall be ensured by the body builder.

You can obtain more information on optional equipment from your Volkswagen customer service and from the Commercial vehicles body builder support (see 2.1 "Product and vehicle information for body builders" or 3.10 "Optional equipment").

Tighten the electrical connecting boltss in the fuse box with the following tightening torques:

Screw size	Screw size tightening torque [Nm]
M6	6+1
M8	12+1

6.4.8.1 Power supply via UF3

Additional electrical consumers shall be connected using the terminal strip for auxiliary consumers (PR no. UF3) that is available from the factory or an additional battery (see 6.3 "Battery"). The terminal strip is fixed on the inside of the driver seat box (front right in direction of travel) and has three connections:

1. Terminal D+	12 V / 10 A
2. Terminal 30	12 V / 25 A
3. Terminal 15	12 V / 15 A

6.4.8.2 Power supply from additional battery supply point

For simplified power supply from the additional battery (PR no. 8FD), a connection point (fuse box) is provided in the driver seat box. It is therefore not necessary to lay additional wiring from the vehicle interior (body builder consumer) to the additional battery in the engine compartment.

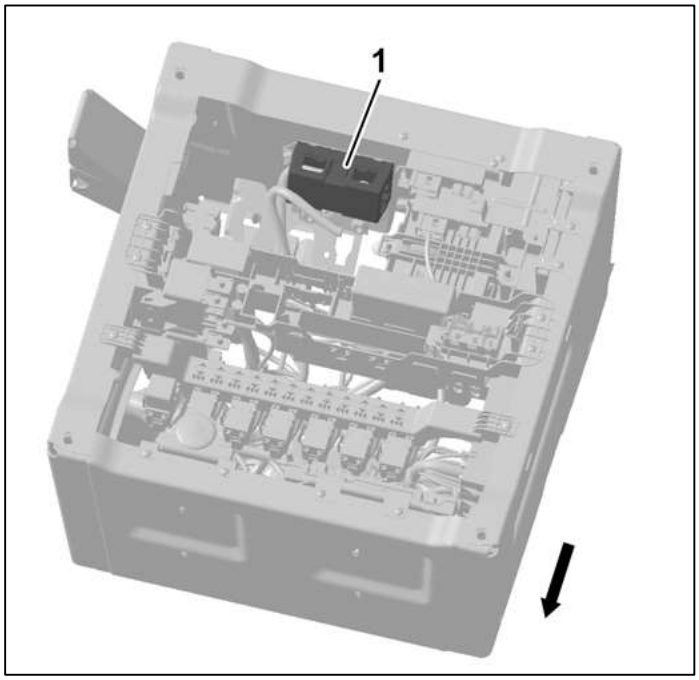

Driver seat box (left-hand drive vehicle)

1	Fuse box
Arrow	Direction of travel

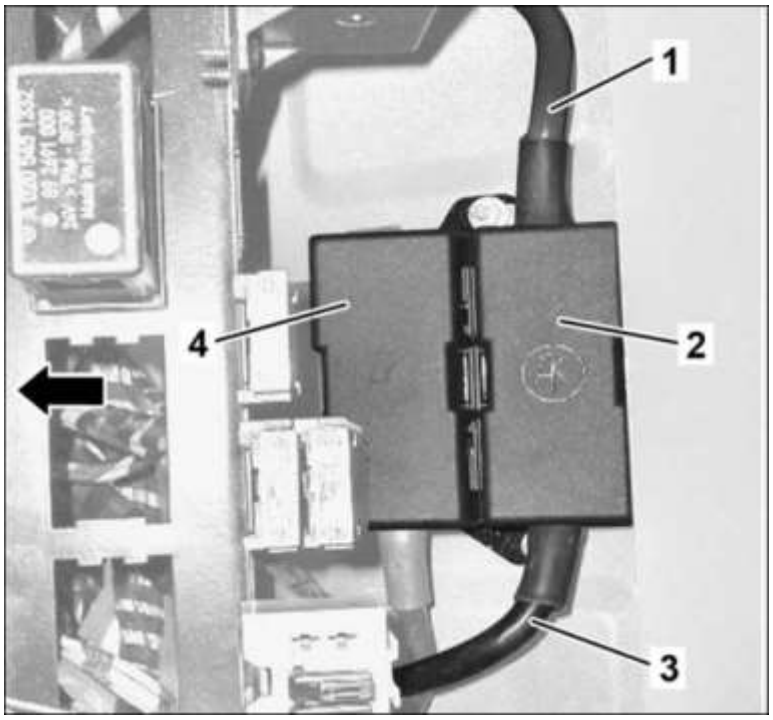

Example of fuse box in driver seat box, left-hand drive (LHD)

1	Isolator relay wire (LHD)
2	Fuse box (LHD)
3	Additional battery supply point (LHD)
4	Second fuse box (optional)
Arrow	Direction of travel

6.4.9 Fuse box from factory

The supply point for additional consumers is the terminal in the fuse box with the direct wire before the additional battery (positive terminal). The cover shall be removed to connect and fit the fuse.

Additional consumers on the additional battery shall be fused separately.

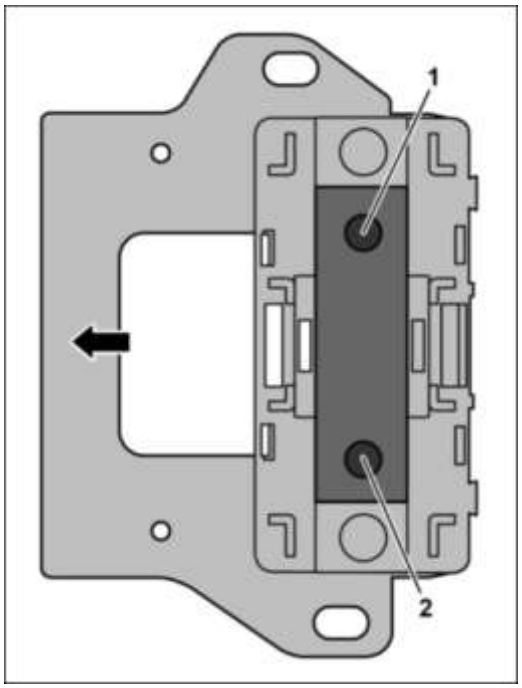

Assignment of fuse box from factory

	Left-hand drive	**Right-hand drive**
1	Isolator relay wire	Additional battery supply point
2	Additional battery supply point	Isolator relay wire
Arrow	Direction of travel	

Determining the supply point by measurement:

- Turn vehicle key to 0
- Disconnect earth wire from the additional battery (in the engine compartment)
- Check the cables on the fuse socket individually for voltage against the earth of the additional battery:
- The live cable is the direct supply cable to the additional battery
- Connect the earth wire to the additional battery again

Practical note

If a vehicle is already equipped with a consumer that uses the fuse box in the seat box at the factory, another fuse box will be required. Otherwise overloading and a blown fuse could result.

6.4.10 Second fuse box and fuse

Depending on the vehicle equipment, a second fuse box will already be installed at the factory. If the vehicle is equipped with only one fuse box, a second fuse box for connecting further consumers can be fitted to the threaded pin. After removing the factory-fitted copper bridge, the second fuse box is connected via a right-angled copper rail. The additional consumer can be connected to the additional battery via a suitable fuse in accordance with ISO 8820 SF51.

The prerequisites for connection to the additional battery:

- No more than one fuse box in the seat box from the factory
- Only the 35 mm cables are screwed to the fuse box on both sides
- Fuse box, part number 2E0.919.839.G
- Right-angled copper rail, part number 2E0.937.521.A
- Washer, part number WHT.003.320
- Suitable fuses in accordance with ISO 8820 SF51

If both fuse boxes in the driver seat box are occupied ex-works, comply with the following:

- No further consumers are allowed to be connected to the second factory-fitted fuse box.
- Use the positive terminal of the additional battery for connecting additional loads.
- A suitable fuse box with fuse is required for all additional consumers.
- A positive overall charge balance shall be ensured in all vehicle modes.

The fuse box is used at the factory for the following optional equipment and is not available for further consumers (table only shows a few examples):

Optional extra	**PR number**	**Max. rated current (fuse)**
Retarder preparation	1H5	100 A
Tail lift preparation	5S4/5S8	250 A
3-way tip function preparation	5HN	250 A

6.4.10.1 Arrangement of two fuse boxes with optional equipment (e.g. tale lift or 3-way tip function)

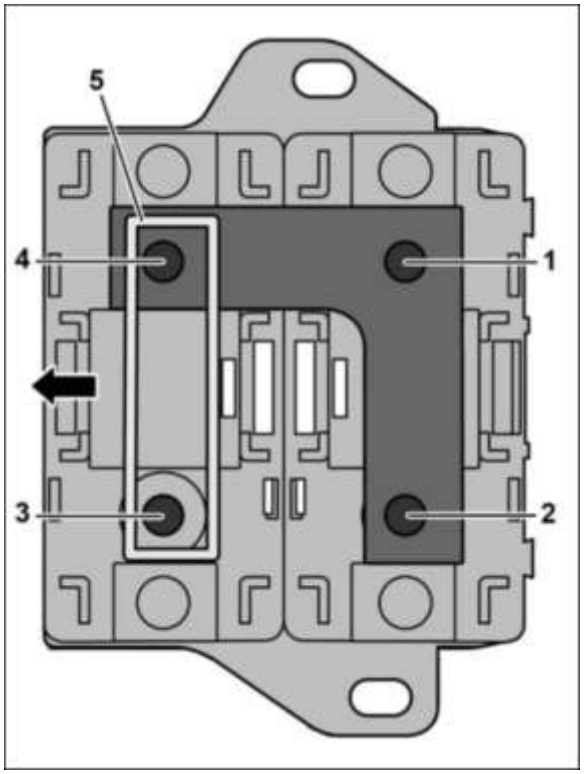

Occupation of two fuse boxes (left-hand drive vehicle)

1	Isolator relay wire
2	Additional battery supply point
3	Load connection optional equipment
4	Positive terminal via bridge
5	Fuse
Arrow	Arrow direction of travel

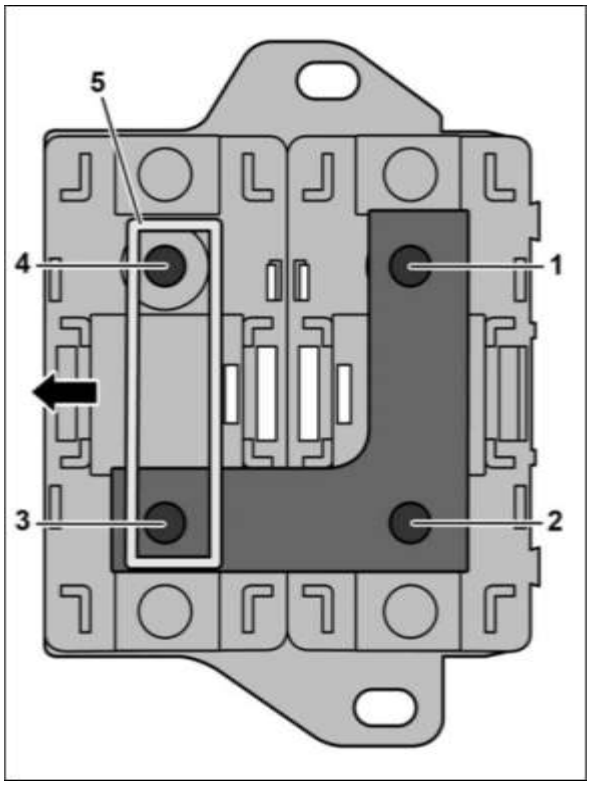

Occupation of two fuse boxes (right-hand drive vehicle)

1	Additional battery supply point
2	Isolator relay wire
3	Positive terminal via bridge
4	Load supply point optional equipment
5	Fuse
Arrow	Arrow direction of travel

6.4.10.2 Arrangement of two fuse boxes with retarder and optional equipment (e.g. tail lift or 3-way tip function)

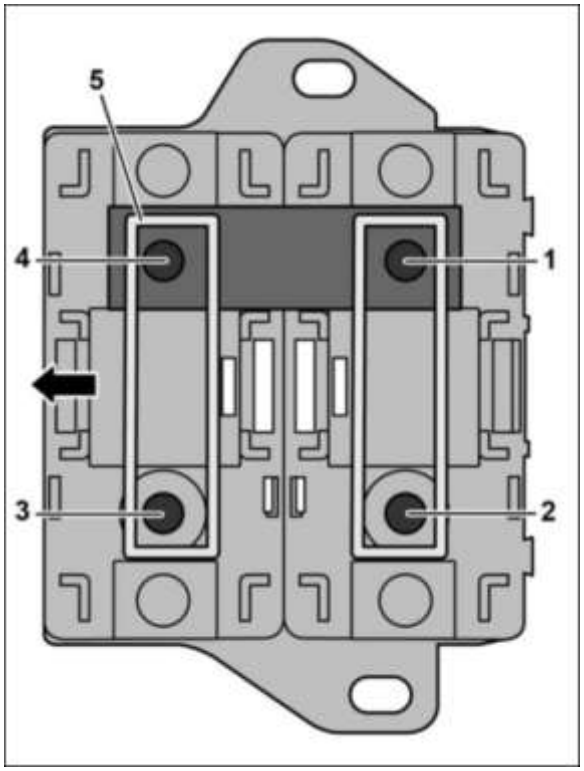

Occupation of two fuse boxes, ex-works retarder preparation (left-hand drive vehicle)

1	Isolator relay wire
2	Retarder supply point
3	Load supply point optional equipment
4	Additional battery supply point
5	Fuse
Arrow	Arrow direction of travel

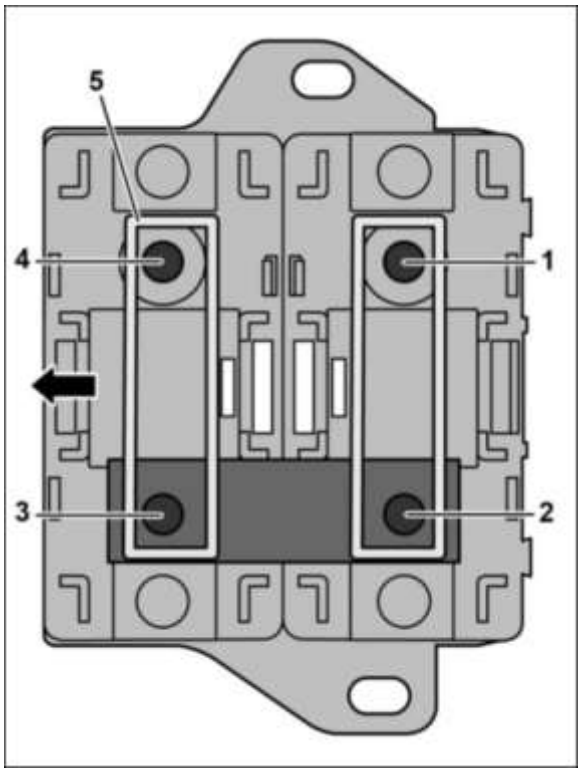

Occupation of two fuse boxes, ex-works retarder preparation (right-hand drive vehicle)

1	Retarder supply point
2	Isolator relay wire
3	Additional battery supply point
4	Load supply point optional equipment
5	Fuse
Arrow	Direction of travel

6.4.11 Interfaces overview

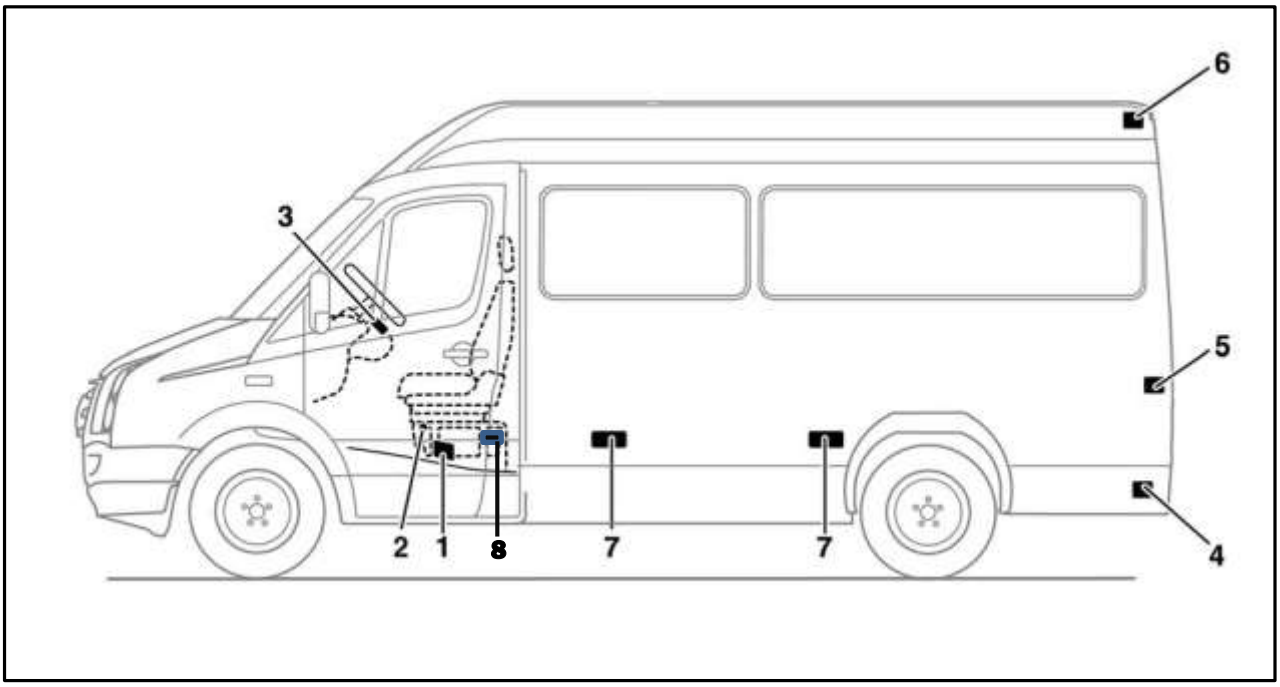

	PR number	Description
1	UF3	Fastening strip for electrical connection on driver seat box (“Electrical terminal strip”)
2	7B5, 7B6, 7B8	12 V socket in cab (max. 15 A); position: driver seat box
3	9CX	Electrics for body interior lighting 3-pin disconnecting point in seat box on left, switch in dash panel (“Preparation for load compartment lighting”)
4	1M5	Electrics for trailer socket (“Preparation for towing bracket”)
5	8SE	Tail light wiring harness extended from the (2 m) (“Tail light cluster with extended cable”)
6	9H2	Electrical equipment for additional turn signals
7	7R8	Preparation for side marking lights
8	---	Fuse box supply point (contained in PR no. 8FD/additional battery)

6.4.12 Speed signal

The "Highline" and "Lowline" instrument clusters supply an electronic speed signal at pin 9 of the connector on the instrument cluster.

The speed signal (positive against earth) serves as a travel and speed signal for external electronic devices, e.g. taximeter or speed-dependant volume control. The signal is short-circuit resistant against earth and battery voltage and is not monitored.

4 pulses are emitted per metre. The pulse width is 4 ms.

At 112.5 km/h, the pulse duration is equal to the pulse pause. This 1:1 ratio is maintained to higher speeds. This means that at high speeds the pulse length and pause length get shorter at the same time.

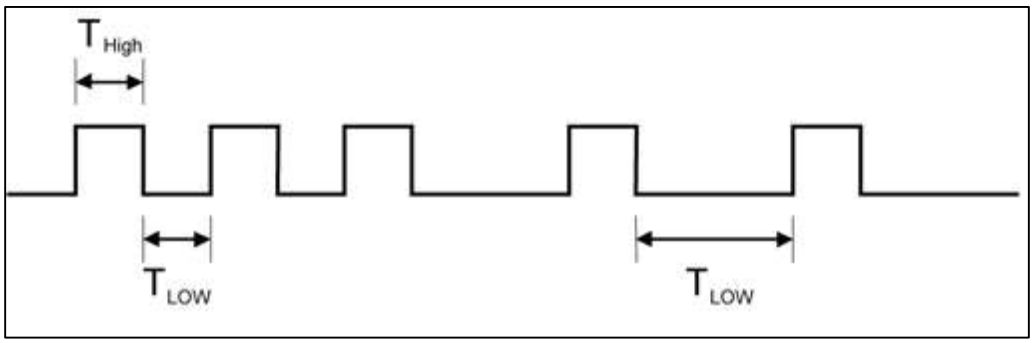

Ratio of pulse duration/pulse pause

Speed signal (I_{max} = 20 mA):

T_{High} $U_a \geq 8$ V

T_{Low} $U_a \leq 1$ V

6.4.13 Earth stud

Use the earth studs provided by Volkswagen for subsequent electrical add-ons or installations to ensure an optimum earth connection to the base vehicle.
Two earth studs (M6) are located in the area of the driver seat in the left seat box; another earth stud (M6) is located under the vehicle on the cross member in front of the rear axle.

Warning note

The use of other earth studs can lead to malfunctions in safety systems. This can lead to a failure of components or safety-relevant parts and to error messages in the instrument cluster.

- A maximum of 4 terminals are allowed to be screwed to an earth stud.
- The nuts shall be tightened to a torque of 6 Nm.
- The earth studs of the safety systems are not allowed to be used for bodies.

If there are further requirements, please consult the responsible department (see 2.1 “Product and vehicle information for body builders”).

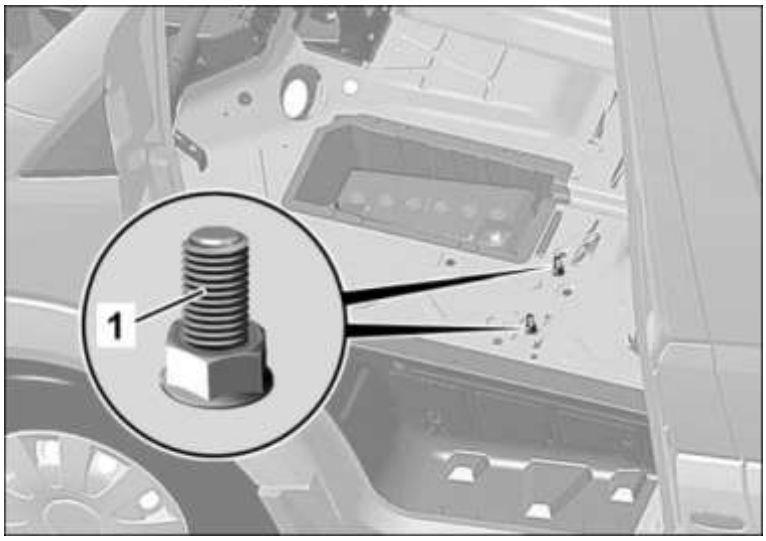

Cab earth connection, body-in-white

[1] Earth stud

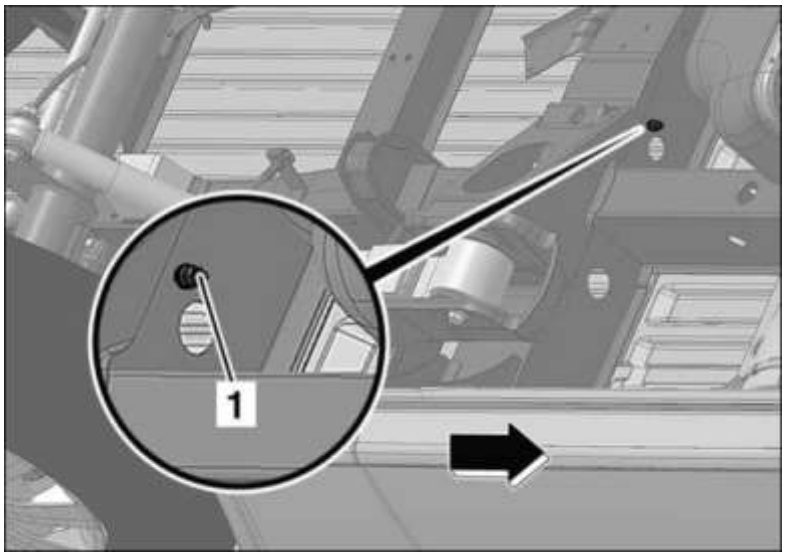

Frame earth connection (3.5 t in front of rear axle)

[1] Earth stud

Arrow direction of travel

6.4.14 Subsequent installation of a reversing camera (PR no. 7X3/7X4)

6.4.14.1 Series production camera

The series production reversing camera (PR no. 7X8/7X9) must be used in order to allow the reversing camera to be used with static lines.

The prerequisites for this are:

- Vehicle design must be a closed model (panel van, window van).
- PR no. 7X3/7X4 and PR no. I6M/I6N/I6P (RSD 4000/RNS6000) must be fitted.
- After the camera has been connected, the camera input and the static lines on the RSD4000/RNS6000 must be enabled using the vehicle diagnostic tester (online coding).

6.4.14.2 Non-VW camera

The reversing camera function can also be implemented on the RSD 4000/RNS 6000A (PR no. I6M/I6N/I6P).

The following preconditions must be met for this purpose:

- Video transmission must be in the NTSC standard.
- A 75 ohm coaxial cable with FAKRA II socket must be used.
- PR no. 7X3/7X4 must be fitted.
- Once the non-VW camera has been fitted, the camera input must be activated in the RSD4000/RNS6000 using online coding, and the static lines deactivated. This is done via a measures code.

Volkswagen AG cannot be held responsible for the correct function of non-VW cameras in conjunction with the audio system RSD 4000/RNS 6000A (PR no. I6M/I6N/I6P).

Information

Further information on retrofitting of a reversing camera and on the measures code can be found in the Volkswagen InfoNet or from the Commercial Vehicle Service Centre of Volkswagen AG:
nsc.convert@volkswagen.de

6.4.15 Subsequent installation of a toll collection system

Information

With effect from 1 October 2015, there is a toll duty in the Federal Republic of Germany for vehicles and vehicle combinations whose gross vehicle weight rating is at least 7.5 tonnes (see BFStrMG). The Crafter 50 in towing mode with 2.5t and more is affected (see chapter 4.3.5).

The following points must be borne in mind for installation of a toll collection system:

- Installation by trained experts and authorised workshops
- Installation in accordance with the fitting instructions of the respective device manufacturer.
- During installation and removal of vehicle components, the Workshop Manuals of Volkswagen AG must be observed.
- A DIN shaft must be used for installation (e.g. centre console, roof trim in cab).
- Power supply (terminal 15, terminal 30): Additional electrical consumers shall be connected using the fastening strip for auxiliary consumers (PR no. UF3) that is available from the factory as described in chapter 6.4.8.1 “Power supply via UF3”.
- Earth tapping (terminal 31) can be carried out via the earth stud in the left-hand seat box, as described in chapter 6.4.13 “Earth stud”.
- Tapping the v-signal (speed signal): The “Highline” and “Lowline” instrument clusters supply an electronic speed signal at pin 9 of the connector on the instrument cluster.
- During assembly of the GSM/GPS aerial on the roof, please note chapter 6.6.2 Connection and laying of cables for aerial.

6.5 Lighting

6.5.1 Headlight adjustment

The national registration provisions apply.
Comply with the basic headlight setting (see type plate).

Information

On vehicles with PR no. GC5 "Body raised for Crafter (camper)", headlight adjustment in unassembled state is not possible. Therefore the body builder shall adjust the headlights after fitting the vehicle body.

Only test the headlight position while the vehicle is unloaded (ready to drive, with full fuel tank and with a driver or 75 kg weight).

- Park the vehicle on a level horizontal surface.
- Align the headlight adjustment unit and the vehicle at a right angle to each other.
- Set the correct tyre pressure (see tyre pressure table).
- Set the headlight range switch to the basic position “0”.
- Switch on the headlights.
- Each headlight shall be tested individually;mask the second headlight and the other lights.

The bright/dark boundary of the dipped beam at a distance of 10 m results from the headlight height (centre of headlight to floor) minus the specified headlight basic setting.

Headlight basic setting:
1% = 10 cm, 1.5% = 15 cm, 2% = 20 cm
etc.

6.5.2 Auxiliary lights

The national registration provisions apply.
If a lighting system is covered by moving vehicle parts by more than 50 % during operation, the vehicle shall be secured accordingly.
An indication of this shall be clearly visible for the vehicle driver.

Practical note

Please note that since 1 Nov 2013, illumination devices according to the requirements of ECE-R 48 are compulsory. This has the consequence that a 3rd brake light for M1 and N1 vehicles is required with a closed structure (such as a chassis with a closed structure by the body builder).

6.5.3 Tail lights

The national registration provisions apply for all lighting and flashing units.
The following optional equipment is available for subsequent modifications to the vehicle tail light clusters under PR nos. from the factory:

PR number	**Name of optional equipment**	**Description/use**
8SY, 8SZ	Omission of tail light clusters	Retrofitting of other light and turn signal units is possible; the connections and wiring harnesses are retained.
8SE	Tail light wiring harness extended	The extended end wiring (approx. 2 m) is used as a preparation for subsequent mounting of the tail lights in a different position.
9H2	Electrical equipment for additional turn signals	The additional wiring at the vehicle rear is provided for additional turn signals on the body for chassis with cab and double cab.

Position of standard tail lights

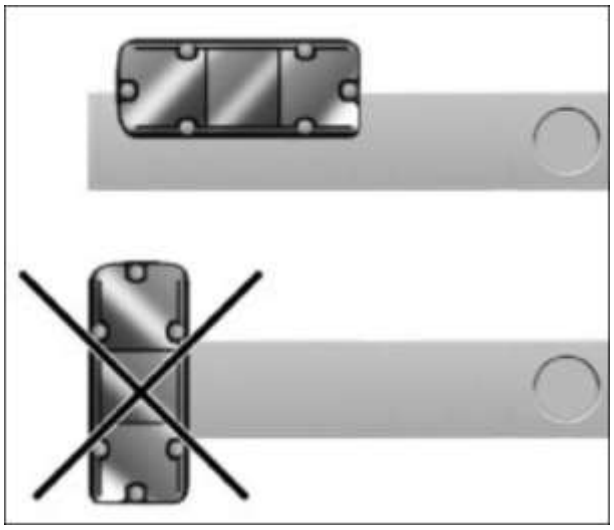

Practical note

The standard tail lights shall be fitted in horizontal position. Otherwise water can enter through ventilation holes, the standard tail lights could fail and there could be faults in the electronics!

If tail light clusters are to be fitted differently, the body builder shall use its own suitable tail light clusters.

6.5.4 Marking lights

6.5.4.1 Side marking lights

To increase the passive safety, all complete vehicles with a total length over six metres shall be equipped with side marking lights in accordance with EU directive 76/756/EEC.
The optional equipment "Preparation for side marking lights" for chassis with cab and double cab is available from the factory under PR no. 7R1. If equipped with PR no. 7R1, subsequent parametrisation/activation shall be performed with a vehicle diagnostic tester.
In addition, the PR no. 8F1 "Side marking lights" is available for all prototypes. On chassis with cab and double cab, the marking lights are mounted on the left and right of the frame longitudinal member (lights and holder are delivered in a bag). If equipped with PR no. 8F1, subsequent parametrisation/activation with a vehicle diagnostic tester is not necessary.

6.5.4.2 End-outline marker lamps / vehicle marker lights

End-outline marker lamps increase the passive safety and are required for vehicles with widths greater than 2.10 m. They can be attached from a width of 1.80 m (§ 51b, Abs. 2, StvZO).
The "end-outline marker lamps" ("position lamps on the roof") are available from the factory under PR no. 6S3.

6.5.5 Exterior lights

Practical note

Only bulbs of the same type and same wattage as the standard bulbs are allowed to be installed to ensure that the standard bulb failure monitor works (see 10.2 "Bulb ratings for exterior lights").

6.5.5.1 Light monitoring

All outputs are monitored for "open load" (broken wires) and short-circuits by the signal recording and control unit (SAM). If a lamp is not connected or has too much power, a fault entry is made in the memory of the SAM control unit. The vehicle owner or the driver shall be informed and an entry in the Service Schedule is recommended. The fault entry shall be investigated during a service by reading with the VAS tester.

6.5.5.2 Additional lights

Additional lights (such as the 3rd brake light) can be operated via PSM or a separate cube relay (B).
Optionally, a standard cube relay (Ri > 80 ohm) can be connected in parallel to the exterior lights A.
This does not lead to negative effect on the light monitoring system.
Exception:
The relay must not be connected to the exterior lights: third Brake lights, turn signals, number plate light, side markers and marker lights

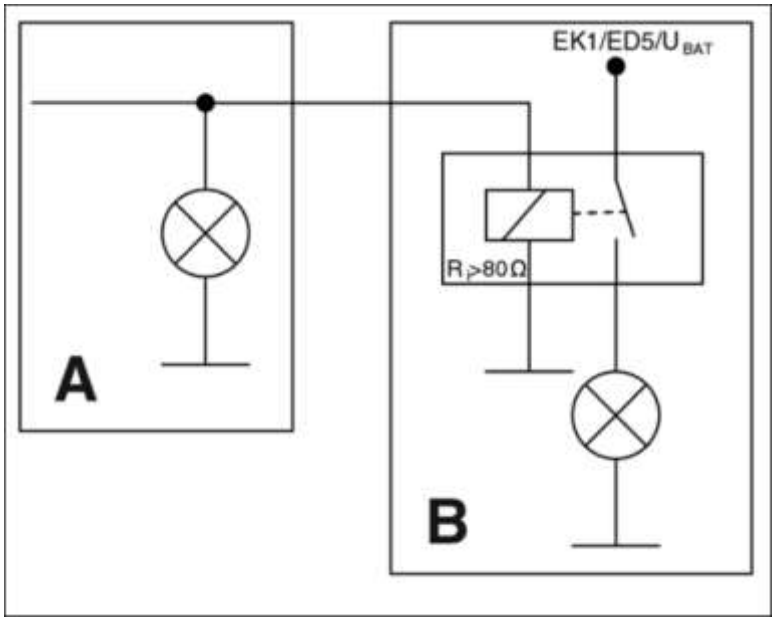

Connection of auxiliary light

A Scope of base vehicle

B Scope of body builder

Practical note

A warning buzzer can optionally be connected in parallel to the reversing light. The current rating of the warning buzzer is allowed to be a maximum of 300 mA. We recommend using a warning buzzer with piezo technology.

6.5.5.3 Retrofitting the 3rd brake light

In addition to the option to connect additional lights as described in 6.5.5.2, it is possible to order a pre-installation at the factory when retrofitting a 3rd brake light.
The preparation (PR no. 8R6) includes a 4-pin coupling point in the driver seat box with two lines (pin 1 earth, pin 4 brake light signal).
As a 3rd brake light, lamps with up to 600 mA current consumption are permitted (to ensure the bulb failure monitoring function, a lamp with 120 mA should be used with 12V).
After connection of the 3rd brake light, the output on the vehicle electrical system control unit still must be enabled via the VAS tester (online coding).

Practical note

The third brake light uses approx. 1.8 W LEDs and cannot be replaced with a bulb-type light.

6.5.6 Interior lights

All interior lights can be replaced with other lights chosen by the body builder. The interior lights are operated via SAM-networked read-back switches (SAM = signal recording and control unit).
There is only short circuit monitoring, maximum load 80 W. As standard, the lights are activated at dimmed level. If fluorescent lights or relief relays are used, the dimming shall be deactivated in the SAM control unit. This is done via the optional equipment "Work lights" (PR no. 9CX "Preparation for load compartment lighting"). The read-back switch shall always be connected to the SAM as there will otherwise be no interior light function.

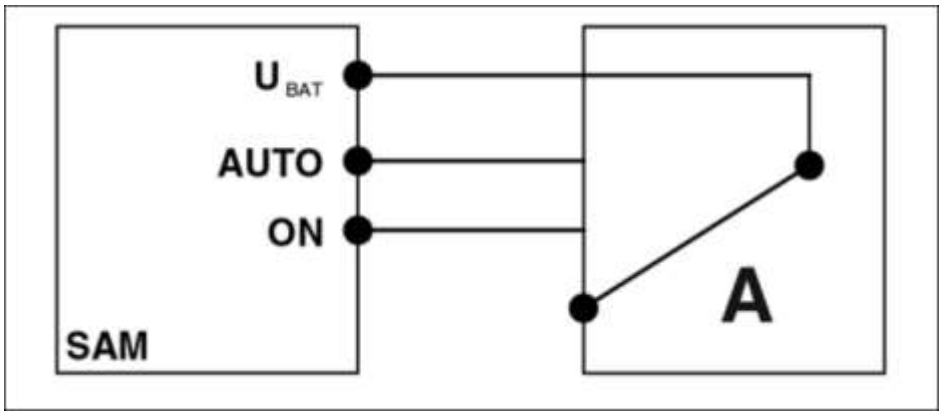

Operating principle of read-back switch

U BAT Interior light supply (+12 V)

AUTO Activation by SAM, e.g. when a door is opened

ON Interior light constantly activated

A Read-back switch (interior light)

6.5.7 Rain and light sensor

The rain and light sensor (PR no. 8N3/ZA3) is only allowed to be installed with the intended standard/optional equipment windscreen variants. Otherwise there could be a malfunction.
The roof control unit shall also be installed (contains the interface).

6.6 Mobile communication systems

If mobile communication systems (e.g. telephone, CB radio) are retrofitted, the following requirements shall be met to avoid vehicle faults later on (see 4.7.2 "Retrofitting electrical devices"):

- All installed electronic devices require a type approval in accordance with EU directive 72/245/EEC and shall bear the "e" mark.

6.6.1 Devices

The maximum transmission power (PEAK) at the base of the aerial shall not exceed the following values.
Country-specific laws on maximum legitimate transmission powers shall be observed.

Frequency range	Maximum transmitting power [W]
Short wave (f < 50 MHz)	100
4 m frequency band	30
2 m frequency band	50
Trunked radio/TETRA	35
70 cm frequency band	35
GSM 900/AMPS	10
GSM 1800	10
UMTS/LTE	10

- The mobile communication systems and holders shall not be positioned in the deployment area of the airbags (see 7.4.2.3 "Frontal airbag").
- The devices shall be permanently installed. Mobile devices within the cab are only allowed to be operated via an external aerial installed in such a way as to eliminate reflections.
- The transmitter shall be installed in a separate location from the vehicle electronics.
- The device shall be protected against moisture and severe mechanical shocks; comply with the permitted operating temperature.

6.6.2 Connection of and laying cables for aerial (radio)

- The manufacturer's instructions and installation guidelines shall be observed.
- The installation of an aerial is possible on the whole of the vehicle roof. The maximum transmission power is not allowed to be exceeded.
- The connection shall be made directly on terminal 30 via an additional fuse. The device shall be disconnected from the electrical system before jump starting.
- Cables shall be kept as short as possible, shall be entwined and shall be shielded (coaxial cable). Abrasive areas shall be avoided.
- Ensure good earth connections to body (aerial and device).
- The aerial and connecting wires between the transmitter, receiver and controls shall be routed separately from the vehicle wiring harness in the area of the body earth.
- The aerial wire is not allowed to be kinked or crushed.
- HAZMAT and ADR guidelines shall be observed.

6.7 Electronic ignition lock

6.7.1 General notes

- The check and control of access authorisation for the central locking system is linked to the signal recording and control unit (SAM) and the door control unit (TF).
- The infrared communication with the remote control key takes place via inductive energy transfer.
- The transfer of the remote control key query values to the entry and start authorisation control unit III (FBS III) releases the electronic steering column lock and the engine control unit.
- The electronic steering column lock is engaged when the vehicle key is removed if the last recorded speed signal is < 3 km/h and the key has been pulled out at least 4 mm. If the last recorded speed signal was > 3 km/h, the doors will only be locked once the door contact switch signals that the driver door has been opened for longer than 1 second.
- The vehicle key activates the individual terminals (15, 15R) depending on the angle of rotation.
- The vehicle key is locked mechanically in the turned position.
- If the key is not identified (invalid key), the lifting magnet in the electronic ignition lock will prevent the key being turned.
- The memory functions will be assigned if the key has been identified.
- The electronic ignition lock serves as an interface (gateway) between the interior CAN (CAN B) and the engine compartment CAN (CAN C) for exchanging data between the two bus systems.
- The diagnosis CAN serves as a central diagnosis interface to all diagnosis-capable control units.
- An HF receiver has been integrated.
- With networked control units, the electronic ignition lock sends global information, for example, series and country variants, via the network to the CAN B and CAN C control units (global variant coding).

6.7.2 Central locking / subsequent integration of doors by the body maker

6.7.2.1 General

It is possible to adapt the central locking system to the body or to the type of use for body builder solutions. The following functions can be configured by means of variant coding in the electronic ignition lock using the VAS tester:

- Activation of the automatic locking (default 15 km/h)
- Deactivation of automatic opening
- Possibility for safety vehicles to deactivate the automatic central locking opening
- Subsequent integration of body builder's doors into the central locking system

Activation of automatic locking with VAS tester:
- Speed (adjustable, default 15 km/h)
- Ignition “ON”
- Automatic locking when the last open door is closed (post function)

Deactivation of automatic opening with VAS tester:
On safety vehicles it is possible to deactivate the automatic central locking opening. This involves a function that can be set with the VAS tester using the variant coding in the electronic ignition lock. The responsible department will provide information on this (see chapter 2.1 “Product and vehicle information for body builders”).

6.7.2.2 Subsequent integration of doors by the body builder

Depending on the vehicle equipment, the body builder has the option of integrating doors added to the body into the central locking system of the chassis. It is operated with the vehicle key for the base vehicle.

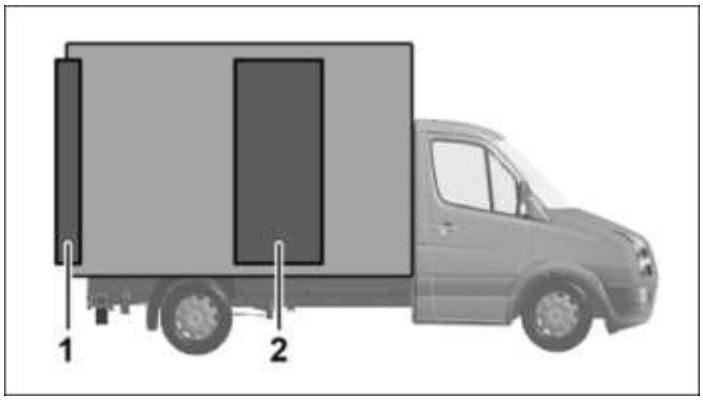

Example of body builder doors

[1] Rear pivoting door

[2] Side door

There are two ways to integrate additional doors into the central locking system of the chassis:

- Integration of additional doors via PSM
- Integration of additional doors via SAM

6.7.2.3 Integration of additional doors via PSM

With PSM, it is possible to read signal IDs (for example, "Close door", "Open door") from the vehicle CAN and control additional central locking elements or relays in the body via a PSM output.

Information

More information about possible parameter settings can be obtained from your Volkswagen customer service or from the Commercial Vehicle Service Centre of Volkswagen AG:
nsc.convert@volkswagen.de

Advantage:
- It is possible to use your own door locks and components.

Disadvantage:
- The additional doors controlled via PSM are not monitored in terms of "State open"/"State closed". Therefore the vehicle cannot recognise after the closing procedure whether all additional doors are closed and locked and there is no display in the instrument cluster.

Condition:
- The vehicle optional equipment PSM (PR nos. UF1, UF2 and UF3) is required.

6.7.2.4 Integration of additional doors via SAM

The VAS tester allows non-standard doors to be subsequently registered in the vehicle electronics. The additional doors are connected directly on the signal recording and control unit (SAM). The information on the additional doors on the vehicle is provided with an O-PR no. This PR no. can be parametrised in a Volkswagen customer service department using the VAS tester.

Advantage:
- Parametrisation and equipping with PSM is not necessary.

Requirements:
- Vehicle equipped with at least SAM low (see chapter 10.1 "Signal recording and control unit (SAM)").
- Use of locks with feedback function. We recommend using Volkswagen genuine locks.
- A maximum of three additional doors (right door, left door and rear doors) can be integrated.

6.7.2.5 Preparation for ambulance

The settings required for ambulances, for example, passive switching of the control motors of the rear and sliding doors, can be configured with the VAS tester using the following settings:
- Sliding door on right "not present"
- Sliding door on left "not present"
- Rear door "not present"
- Joint unlocking of control circuit 1 and 2
- Front passenger door "not present"

6.8 Windows and doors

6.8.1 Window regulator/pop-out window latches

If the windows are heavy, the transmission ratio shall be adapted so that the motor consumes the same electrical power.
The window operation time shall not exceed 10 sec. The motor is thermally protected, i.e. if it is run for long periods, the availability of the function might be reduced.
Window regulators and pop-out window latches can only be controlled via the door control panel. The switches are voltage-coded and are only allowed to be replaced with the corresponding genuine parts.

6.8.2 Load compartment sliding door

The Crafter has a fixed electrical connection in the form of an energy chain (trailing chain) to the vehicle electrical system to supply the electrical components in the load compartment sliding door. This is located in the area under the step for the load compartment sliding door.
The energy chain shall be taken into consideration when modifications are made in the sill area. The energy chain can be used for the body builder's needs after consultation with the responsible department (see chapter 2.1 "Product and vehicle information for body builders").
The system has been configured for a load compartment sliding door with a maximum weight of 65 kg. Modifications to the door kinematics and to locks, rails, carriage, power latching system and anti-pinch guard strips are not permitted.

Practical note

If modifications are made, e.g. installation of a window, the correct function of the integrated roll-back function shall be ensured (anti-pinch guard strips and travel/time monitoring)

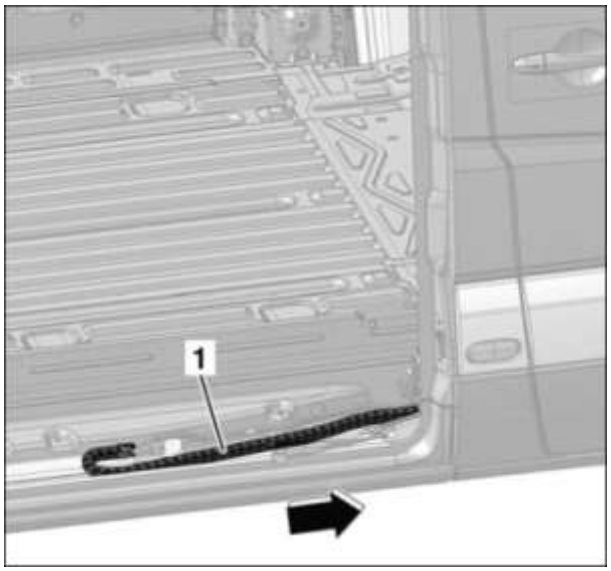

Load compartment sliding door with energy chain

[1] Energy chain (trailing chain)

Arrow direction of travel

6.8.3 Sliding roof

A Volkswagen sliding roof is only allowed to be installed with a roof control panel. The length of the wiring harness between the sunroof motor and the roof control panel shall not be more than 6 m.

6.8.4 Wipers

We recommend using Volkswagen genuine wiper motors.
If necessary, a second wiper motor can be connected via a relief relay (R_i > 80 ohm).
The wiper motor shall be connected to the signal recording and control unit (SAM) via a read-back cable. If this read-back cable is missing, a fault message will be stored in the fault memory.

6.8.5 Exterior mirrors

The output for the exterior mirror heating (12 V/20 W) is monitored by the door control unit. If there is a fault entry, the exterior mirror heating is switched off.
If other mirrors are used (without heating or with another heating system), the door control unit shall be adapted.
The mirror adjustment is load-switching and can be moved if necessary.

6.8.6 Windscreen / rear window heating

The original heating systems can be replaced with heating systems with the same power:
Windscreen heating P = 942 W ±15 % at 13 V
Rear window heating P= 2 x 151 W ±15 W at 13.5 V
If greater heating outputs are required, the relays, wiring and fuses shall be adapted.

6.9. Driver assist systems

6.9.1 Electronic Stability Control (ESC)

ESC is a driving dynamics regulation system that actively regulates both the longitudinal and lateral dynamics.
An extensive system of sensors that constantly compare the actual course of the vehicle with the target course set by the driver allows greater driving stability with ESC.
In all driving situations, ESC contributes to the stability of the vehicle - during acceleration, braking, coasting, driving straight ahead and in corners.
In interaction with the signals from other sensors, a computer checks that the vehicle follows the course set by the driver.
If the vehicle deviates from the target course (understeer or oversteer), a stabilising counter force is applied by braking an individual wheel.

Warning note

The following modifications are not permitted on vehicles with ESC:

- Changing the gross vehicle weight rating
- Wheelbase modifications outside the approved ranges (see 7.2.5 “Wheelbase modifications”)
- Modifications to the sensors (steering angle sensor, yaw rate sensor, wheel speed sensor)
- Changing the vibration behaviour at the installation location in the area of the yaw rate sensor by modifying the body
- Modifying the position of components
- Modifications to the chassis
- Modifications to the wheels and tyres
- Modifications to the engine
- Modifications to the steering system
- Modifications to the brake system
- Conversion into tractor unit

Modifications to vehicles with ESC can lead to this system no longer working correctly and to system shut-down and incorrect regulation. This may result in the driver losing control of the vehicle and causing an accident.

6.9.2 Tyre pressure monitoring system

Warning note

Do not make any modifications in the grey shaded areas of the vehicle substructure (see illustration). Otherwise the function of the tyre pressure monitoring system could be impaired by reflection effects. As a result the driver is not allowed to be able to recognise a loss of tyre pressure and cause an accident. Furthermore the vehicle can in some cases no longer meet the registration requirements.

The aerial positions for the front axle in vehicles with Super Single tyres are at the front of the engine compartment on the right-hand longitudinal member near to the jacking point and behind the right-hand headlight on the inner part of the A-pillar.

The aerial position for the front axle may differ depending on the vehicle equipment.
Depending on the vehicle equipment, the blocked area shown in the following illustration should be kept clear.

The aerial positions for the rear axle are at the rear on the underbody between the wheels (panel and window vans) or on the left-hand longitudinal member near to the axle (cab and double cab).

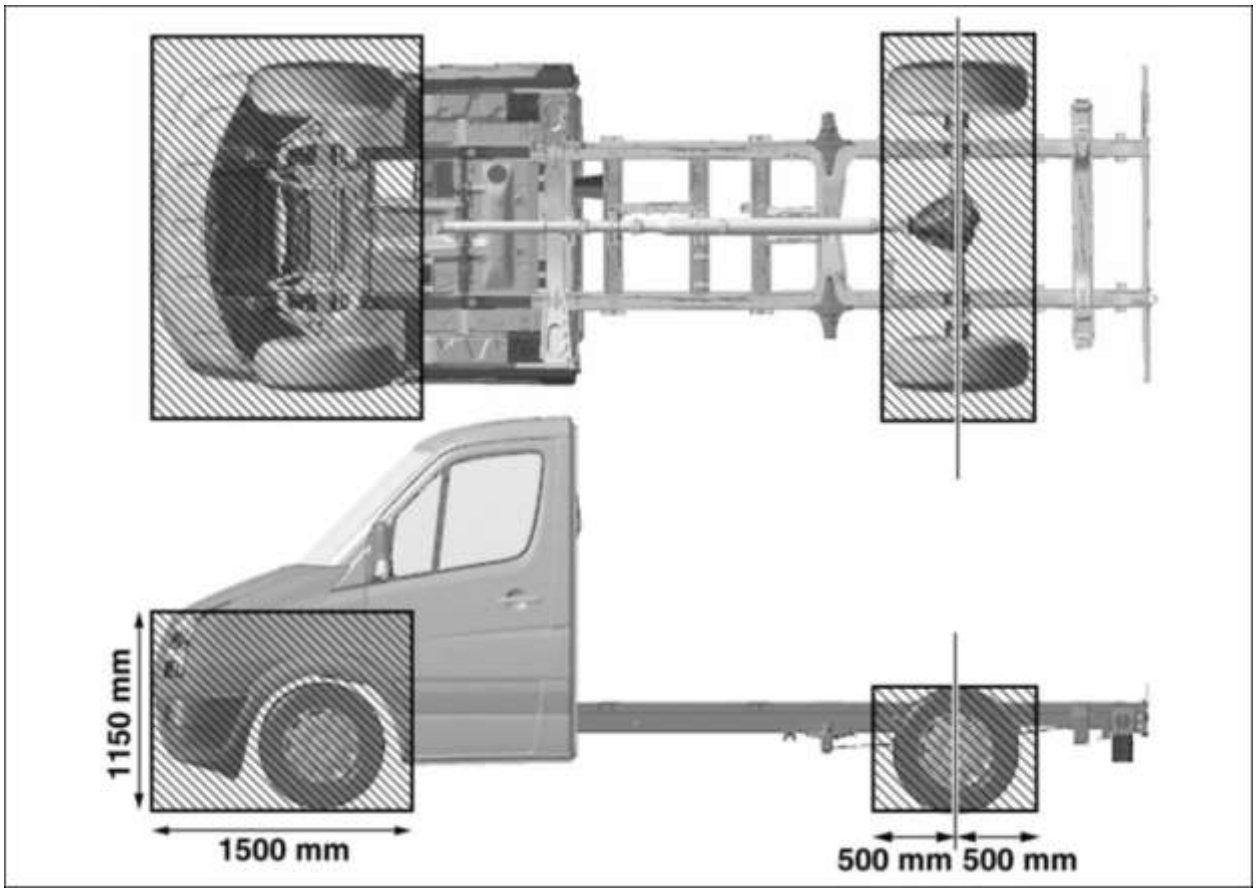

Blocked areas for tyre pressure monitoring system

6.9.3 Rain/light sensor

Practical note

The function of the rain/light sensor could be impaired on vehicles with bodies that extend past the line in the illustration below (e.g. campers with alcove bodies). We therefore do not recommend equipping rain/light sensors on vehicles with bodies that extend past this line.

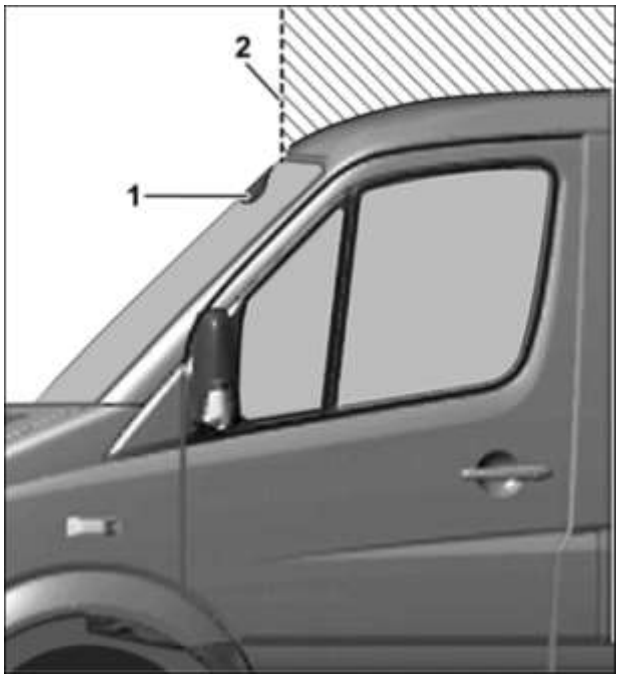

Boundary for bodies on vehicles with rain/light sensor

[1] Rain/light sensor

[2] Body limit

Practical note

The position of the rain/light sensor and its surrounds (e.g. changes to standard windscreen) are not allowed to be modified. Otherwise the rain/light sensor can no longer function correctly.

The rain and light sensor (PR no. 8N3/ZA3) is only allowed to be fitted with the standard windscreens or with windscreens available as optional equipment. Otherwise there could be a malfunction. The roof control unit shall also be installed in each case (contains the interface).

6.9.4 Parktronic

- If approved attachments are subsequently installed, the matching parameter set shall then be coded by your Volkswagen dealership.
- If the bumper is painted, this shall not be done with the Parktronic ultrasound sensors installed. The coat of paint will impair the transmission and reception of the ultrasound signals.

Practical note

Sensors that have already been painted are not allowed to be repainted. Unpainted sensor shall be painted before installation - in order to guarantee the function of the sensors over their service life.

You can obtain unpainted and painted sensors in various colours from your Volkswagen dealership.

The coat thickness of the whole painted surface on the membrane must not exceed 120 mm so that the sensor function is not impaired. This also applies to multiple paint systems and the cathodic dip coating (CDP coating). The thickness of the cathodic dip coating is between 12 mm and 25 mm.
Therefore the coat thickness shall be checked on random samples to ensure perfect function of the sensors.
During painting, make sure that not only the membrane, but also the cylindrical sensor membrane edge is coated evenly with paint at least 2 mm all-round.

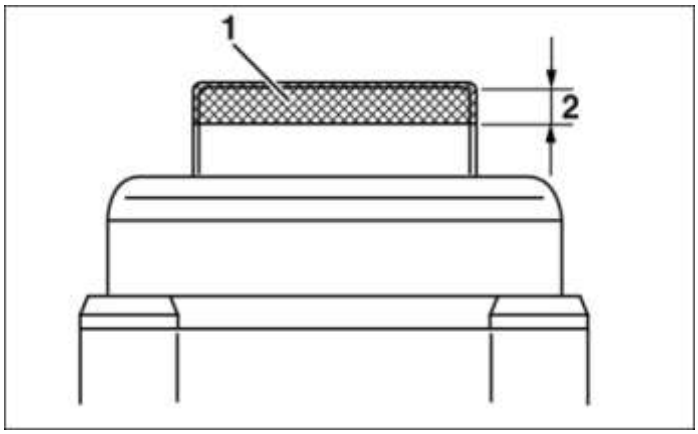

Painting area of cylindrical sensor membrane edge

[1] Painting area

[2] Paint layer thickness, max. 120 mm

Practical note

The paint coat is not allowed to be sanded off mechanically. This could damage the chrome or CDP coat or the sensor membrane.

Practical note

During the CDP primer process, the paint is not allowed to be removed chemically. This could damage the CDP coat and it can no longer be applied later on. Chemical or mechanical reworking is also not permitted.

Practical note

Attachments in the detecting range of the sensors can impair the function of the Parktronic system
(e.g. towing bracket, wheel carrier, steps or bumper guard).

6.9.5 Lane departure warning

Information

According to ordinance VO (EU) 661/2019, from 1 November 2015 vehicles in classes M2, M3, N2 and N3 must be fitted with a lane departure warning system. Exceptions:

- tractor units N2,
  3.5 t <MAM ≤ 8 t MAM
- Certain classes of buses
- Off-road vehicles according to Directive 2007/46/EC, Annex 4.2 and 4.3
- Special purpose vehicles according to 2007/46/EC Annex II, Part A, Section 5 (e.g. mobile homes, wheelchair accessible vehicles, ambulances, hearses, armoured vehicles code "SA")
- Vehicles with more than three axles

The Crafter 50 is equipped with a lane departure warning system (PR no. 7Y6) as standard.

Practical note

The function could be impaired on vehicles with bodies that extend past the line in the illustration below (e.g. campers with alcove bodies). For camper conversions, which protrude beyond this boundary, a base vehicle without lane departure warning must be selected. Vehicles for which a lane departure warning system is legally prescribed must not be equipped with bodies that protrude into the area shown.

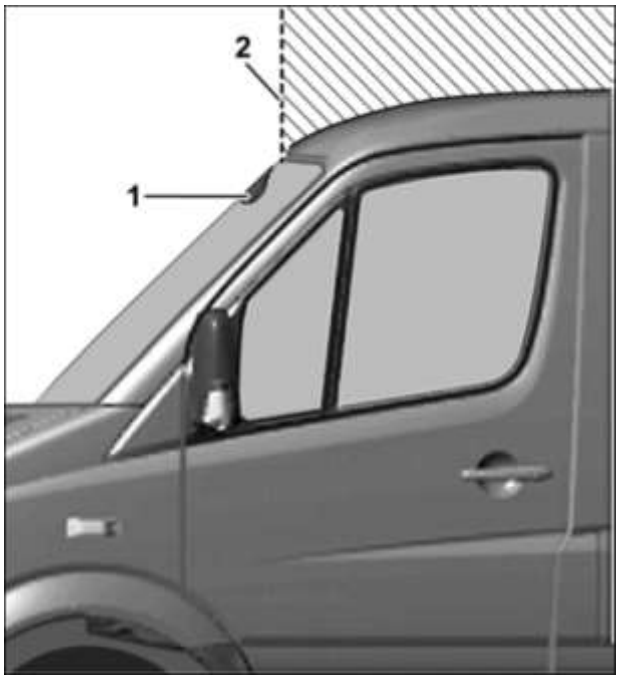

Boundary for bodies on vehicles with lane departure warning

[1] Camera

[2] Body limit

Practical note

The position of the camera and its surrounds (e.g. changes to standard windscreen) are not allowed to be modified. Otherwise the camera can no longer function correctly.

The camera must be readjusted following modifications to the vehicle that change the angle, such as increased weight or suspension strut replacement.
Have the adjustment performed by a qualified specialist workshop which has the necessary specialist knowledge and tools for performing the necessary work. Volkswagen AG recommends Volkswagen customer services for this purpose.
The lane departure warning system can be deactivated via a button in the control panel.

Information

For more information on adjustment of the lane departure warning system, see Volkswagen AG's Repair and Workshop Information System (erWin*):
http://erwin.volkswagen.de/erwin/showHome.do

* Information system from Volkswagen AG, subject to payment

6.10 Electrical interface for external use - parametrisable special module (PSM)

The networking of different control units and components is not analogue with wiring, but instead digital with the aid of several networks:

- Two high-speed controller area networks
- (HS-CAN and engine CAN)
- One diagnosis CAN
- One low-speed CAN (interior CAN)
- One digital optical bus (MOST)

All connected control units understand the messages from the CAN bus and are adapted to the "CAN language", the so-called protocol. The PSM (available under PR nos. UF1, UF2 and UF3) was developed to give body builders the possibility to access individual CAN bus data.

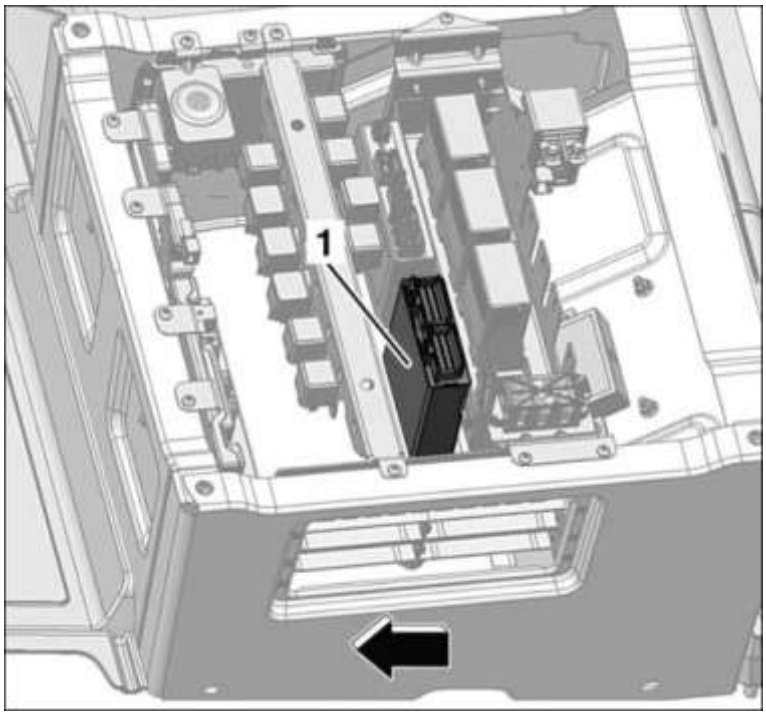

Fitting location of PSM

[1] PSM with connector in driver seat box

Arrow direction of travel

The PSM can read the messages of the different bus data and, for example, convert them into switching signals at specially provided outputs ("High" or "Low" output) or into PWM signals (pulse-width modulation) and forward them to a specified body builder CAN (ISO 11992-3). Accordingly body builder electronics can access the required signals.
The PSM provides a clearly defined, diagnosis capable and EMC-tested interface between the vehicle and body.

Practical note

The vehicle wiring is not allowed to be modified since this will lead to fault messages in other control units on the CAN bus.

The PSM is connected to the vehicle networking by means of linking to the LSCAN bus and thus has access to all messages that are sent by the connected control units (for example: idle contact active, handbrake active, speed C3 and engine speed). In contrast, individual signals can be monitored or generated at analogue and digital input/outputs.

Example:
- The speed is sent in a message from the engine control unit and can be read by the PSM. The PSM converts the speed information into a PPM signal and supplies this at an output.
- In the opposite direction, the PSM can convert the position of a hand throttle into an HS-CAN message and thus request the required speed from the engine.

Information

The PSM is parametrised with the VAS tester. Information about possible parameter settings can be obtained from your Volkswagen customer service and from the Commercial Vehicle Service Centre of Volkswagen AG:
nsc.convert@volkswagen.de

For more information about the topic of PSM and control units of the Crafter, refer to the workshop manuals and the circuit diagrams of Volkswagen AG:
http://erwin.volkswagen.de/erwin/showHome.do

Practical note

When a standard code (for example, retarder) is written, all previous parameters are deleted. We recommend backing up data beforehand.

6.10.1 PSM functions

Reading ICAN:

- Vehicle status
  - Terminal 15
  - Terminal 61
  - external lock, ...
- Light status
  - LDS and LSS requests (e.g.: main beam, turn signal, dipped beam, front fog lights, ...)
  - Hazard warning lights OBF
- Window status
  - Front and rear wipers
  - Windscreen and rear window heating
- Central locking
  - Doors open/closed, unlocked/locked
- Engine CAN information
  - Wheel speed
  - Speed
  - Engine speed, ...
  - Cruise control operation
  - Brakes applied, ...
  - Gearbox
  - Clutch information
  - Steering angle, ...
  - Tachograph information according to FMS standard
- Equipment features
  - Door installation
  - Sliding sunroof
  - Gearbox, ...

Output on ICAN:

- Light control
  - Parking light
  - Side lights
  - Turn signal
  - Main beam, ...
- Alarm functions
  - Alarm/flashing of main beam
  - Fog lights
  - Hazard warning lights
  - Horn
- Sliding sunroof
  - Opening and closing of rear sliding roof
- Central locking function
  - Unlock/lock front, load compartment and whole vehicle
- Windscreen and rear window
  - Front and rear window wipers
  - Windscreen and rear window heating
- Various functions
  - Activate warning buzzer (in window van) and interior light
  - Charging active
  - Retarder function
- Warning signals
  - PSM faulty
  - Undervoltage

Practical note

Please note that the PSM functions of “retarder” and “ continued engine running” are not available in the Crafter 4Motion.

6.10.2 Mini-PLC

The mini PLC (PLC = Programmable Logic Controller) is a module with freely programmable and freely interconnectable function blocks for creating any signal combinations:

- 32 AND/NAND/OR/EXOR/NOR/EXNOR
- 16 RS and D flip-flops
- 8 retriggerable/not retriggerable timer stages
- 8 hysteresis elements with adjustable thresholds
- 8 threshold value switches with 3 stages
- 8 counters

6.10.3 Body builder CAN

A second CAN bus is present on the PSM:
The body builder CAN (ABH CAN).

- High-speed CAN Class C
- Extended CAN identifier (29 bit)
  + Baud rate can be switched between 250 kbit/s and 125 kbit/s
  + Signal format: Intel (LSB first)
  + All bus contents can be separated by parameter setting and activated independently from one another:
    - FMS (only send direction)
    - ISO11992-2 and 3 (excerpts)
    - Freely assignable messages (J1939)

Information

The various possibilities of the PSM cannot be described completely within the body builder guidelines. Information about possible parameter settings can be obtained from your Volkswagen customer service and from the Commercial Vehicle Service Centre of Volkswagen AG:
nsc.convert@volkswagen.de

6.11 Signal recording and control unit (SAM)

The power switching on the Crafter is performed by the signal recording and control unit (SAM) in conjunction with a fuse and relay block. The systems and control units are supplied with voltage via these power switches depending on the functional sequence. The requirements are sent to the SAM either via CAN or via directly read switches and sensors. Furthermore individual components are protected by the fuses on the fuse and relay blocks.
You will find information on other functions in chapter 10.1 “Signal recording and control unit (SAM)”.

6.12 Preparation for retarder

Warning note

The retarder acts as an additional brake on the rear wheels. The ESC shall deactivate the retarder if there is a risk of locking so that the rear wheels do not lock during braking. The retarder shall be connected to the vehicle network via the retarder to this end. The ESC is encoded with "Retarder not present" as standard at the factory. After the retarder is installed, the ESC and PSM shall be recoded accordingly.

The optional equipment PR no. 1H5 "Preparation for retarder" is configured for the retarder type CE35 from the manufacturer Telma. The optional equipment includes the wiring in the vehicle interior for the selector lever, switches and warning lamps and the high-current supply to the switch box (maximum 100 A). If the preparation for Telma is installed in the vehicle, the PSM programme will be coded passively.
The service switch and the lever are read by the parametrisable special module (PSM). The PSM forwards the signals up to the disconnection point under the vehicle to make communication with the retarder control unit possible. The warning lamp is activated directly by the retarder.

A connection terminal 30 is provided on the substructure to supply the retarder with power.
The remaining wiring under the vehicle and from the control unit to the retarder as well as the positioning of the components are tasks for the body builder. An installation description and the wiring, among other things between the switch box and retarder shall be provided by the retarder manufacturer.
For the mechanical connection, see 7.3.7 "Retarder".

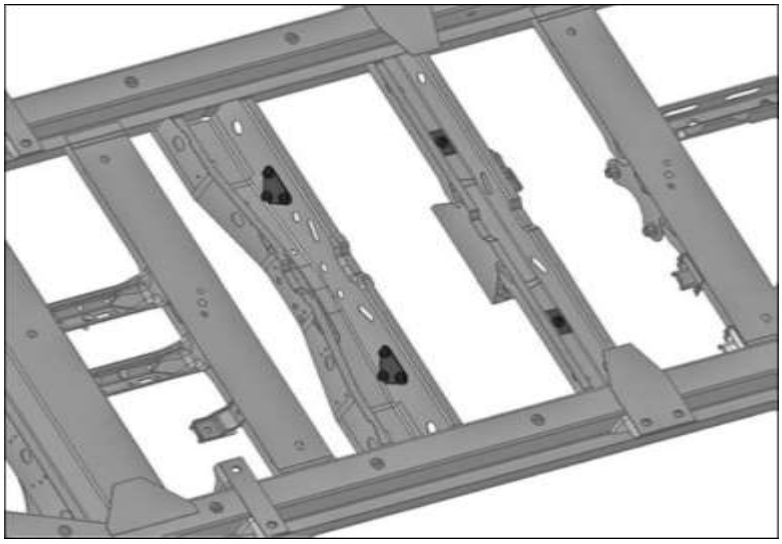

Mounting points for retarder preparation

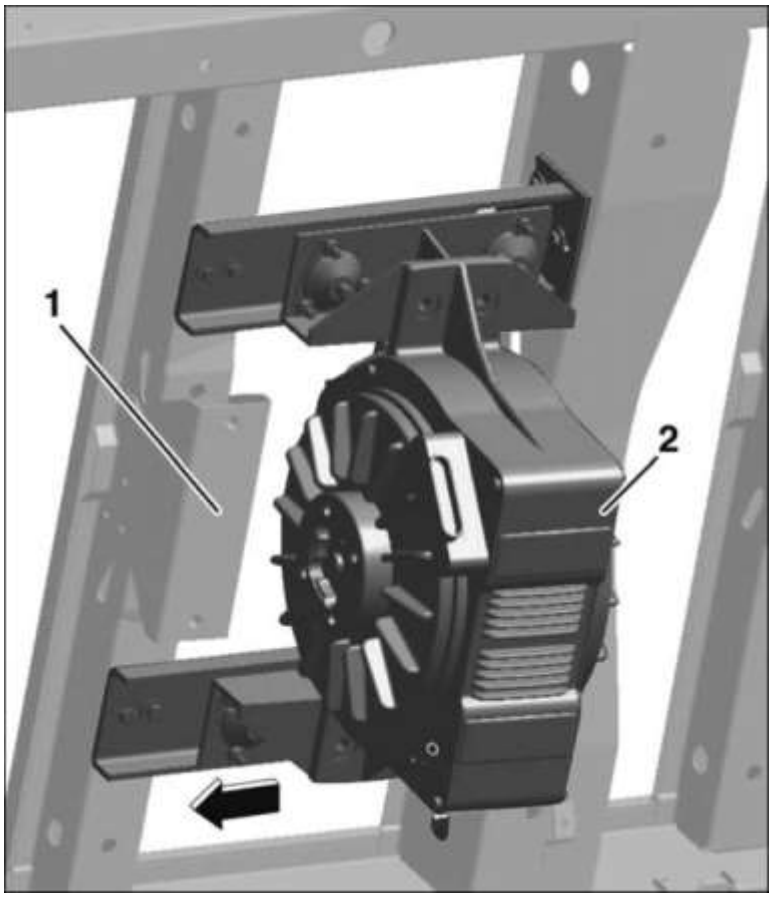

Retarder installation using TELMA as example

[1] Mounting for drive shaft centre bearing

[2] Retarder

Arrow direction of travel

6.13 Preparing the tail lift

The special equipment "Preparation of the tail lift" (PR nos. 5S3, 5S4, 5S8) contains, among other things (according to the requirements of the VDHH):

- Control current preparation
- On/off switch in the cab that closes or opens the control circuit of the tail lift
- Main current preparation
- Earth wire 25 mm, fixed to the vehicle frame, tail lift side with a blue 1-pole ITT Cannon high-current connector
- Plus wire 35 mm, battery side with 10 mm lug to connect the main fuse directly to the positive terminal, tail lift side with a red 1-pole ITT Cannon high-current connector
- Both wires have an overhang of 1000 mm beyond the end of the right-hand longitudinal member. The free wire lengths are tied back in the left-hand longitudinal member.

Practical note

When mounting an electro hydraulic tail lift, a generator, a high-power battery and an additional battery must be used.

Practical note

Before commissioning of the tail lift, an electrical fuse must be inserted in the driver seat storage compartment in the appropriate place by the body manufacturer.

For the mechanical connection, see 7.2.2.2 "Attachment to rear frame" and 7.6.7 "Tail lift").

6.14 Ignition bypass circuit

The ignition bypass circuit (PR no. 7U4) for special vehicles, e.g. police or rescue vehicles, is available ex-works. Subsequent installation of an ignition bypass circuit is not permitted.

Warning note

Subsequent installation of an ignition bypass circuit can lead to critical vehicle conditions, impairments in the vehicle electronics or fault messages. This means subsequent installation of an ignition bypass circuit is not permitted.

6.15 Circuit diagrams

Information

Circuit diagrams are available via the Electronic Repair and Workshop Information from Volkswagen AG (erWin) at:
http://erwin.volkswagen.de/erwin/showHome.de

7 Modifications to the base vehicle

7.1 Running gear

7.1.1 General information on running gear

No additional attachments are allowed to be fitted to the bolting points on the front axle.

Warning note

Modifications to the running gear components can lead to an impairment in the driving properties and unstable driving behaviour. This may result in the driver losing control of the vehicle and causing an accident. Therefore modifications to chassis parts are not permitted.

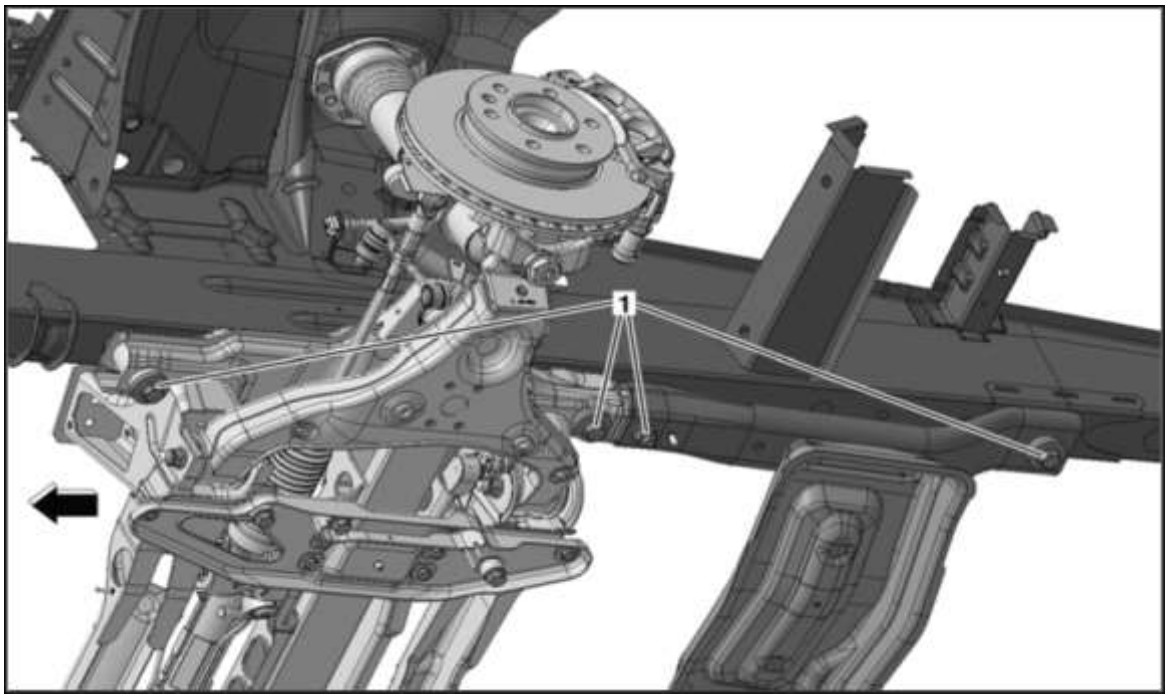

Front axle

[1] Bolting points on front axle

Arrow direction of travel

The following shall be observed in the area of the front axle:

- Front transverse links: Changes to wheel alignment parameters are not permitted.
- The front axle shall not be used for attaching ancillaries or other modifications.
- Rigid axle at rear: modifications are not permitted.
- Brakes: modifications are not permitted.
- Units, sensors, wiring for ESC / ABS: modifications are not permitted.
- New bolts shall be used when installing the front axle. All bolts and bolted connections shall be tightened to the torques specified by Volkswagen. Your Volkswagen customer service department can provide you with information on this.
- Comply with VDI guideline 2862 during all installations, particularly the section "Safety-related bolted connections".
- Shortening the free clamping length, changing over to waisted shank and use of bolts with a shorter free thread proportion cannot generally be permitted.
- Furthermore, take the settling behaviour of screw connections into account.

Information

Any Volkswagen customer service department can provide you with information.

Components that are additionally clamped as well shall have the same or a higher strength than the previous clamped combination.
Use of Volkswagen tightening torques assumes that the total coefficient of friction is within the tolerance range [=0.08 to 0.14].
We recommend Volkswagen standard parts.

7.1.2 Springs / shock absorbers / anti-roll bars

7.1.2.1 General

Several running gear variants are available from the factory. A suitable running gear variant shall be selected depending on the planned body, see chapter 4.2 “Limit values for chassis” or chapter 2.10 “Delivery range”.

Modifications can only be made to springs, shock absorbers and anti-roll bars in the combinations on the front and rear axle specified by Volkswagen. A safety certificate is not required in this case. Further modifications shall be coordinated on the front and rear axle.

More information and, if necessary, corresponding safety certificates can be obtained from the responsible department.

- We recommend Volkswagen genuine springs.
- During assembly work, care shall be taken not to damage the surface and corrosion protection of the spring leaves.
- Before starting welding work, cover springs to protect them against weld spatter.
- Springs are not allowed to be touched with welding electrodes or welding tongs.

The use of springs and shock absorbers that do not correspond with the properties of the standard parts or the parts available as optional equipment is not permitted. We recommend using Volkswagen standard parts.

Warning note

The use of springs and shock absorbers that do not correspond with the properties of the standard parts or the parts available as optional equipment is not permitted. Otherwise the ESC system in vehicles with ESC will no longer function correctly and will fail. This may result in the driver losing control of the vehicle and causing an accident.

7.1.3 Brake system

Warning note

Work performed improperly on brake hoses, lines and cables can impair their function. This can lead to a failure of components or safety-relevant parts. Have work on brake hoses, lines and cables performed only by a qualified specialist workshop.

The brake system shall be checked for perfect functioning after completion of the work. We recommend inspection by a technical test centre.
If wiring needs to be re-routed, avoid laying across sharp edges and routing inside excessively narrow cavities and close to moving parts.

7.1.3.1 Hydraulic brake system

- Hydraulic brake lines shall be replaced with approved 4.75 mm x 0.7 mm or 6 mm x 0.7 mm wound piping.
- The bending radius shall be >17.5 mm.
- Lines are only allowed to be shaped in a bending tool. The cross-section is not allowed to be reduced.
- Slide union screws (part no. WHT 002 107) onto the ends of the lines and flare end (F DIN 74234).
- The inside of the lines shall be cleaned before installation.
- The use of plastic lines in hydraulic systems is not permitted.
- The brake fluid shall be changed every two years.
- If you do not know how long a vehicle with hydraulic brake system has been standing, the brake fluid shall be changed.
- When laying a brake line between two components that move in relation to each other, a flexible line (hose, steel braided etc.) shall be used.

7.1.3.2 Line routing

Warning note

Sufficient spacing between the brake lines and heat sources, sharp edges and moving parts shall be ensured. Otherwise the impairment and total failure of the brake system could result due to the formation of bubbles in the brake fluid or abrasion on the brake line.

- We recommend genuine brake line fasteners from Volkswagen for clipping in the brake line.
- The spacing from fastener to fastener is not allowed to exceed 500 mm.
- The handbrake cable shall be routed without kinks.
- Changes in angle at the ends of the handbrake cable sleeve (loose wire strands) are not permitted.

7.1.3.3 Routing additional lines along the brake hoses/brake lines

No additional lines are allowed to be fastened to brake hoses and brake lines.
Additional lines must remain at a sufficient distance from brake hoses and brake lines under all operating conditions, and are not allowed to touch or chafe against such brake hoses/lines under any circumstances.

7.1.3.4 Cable for handbrake/changing the length of the handbrake cable

If a new cable is required for the handbrake, the new length of the cable shall be measured and a new suitable cable obtained.
The handbrake cable fasteners are moment-optimised; modification is not permitted.

Please note that the brake cable of the parking brake (FBA) as well as its cable support bracket are safety-relevant parts, and form part of the type approval for the brake system. Any modification will require a new approval process.

7.1.3.5 Disc brakes

Cooling is not allowed to be impaired by spoilers under the bumper, additional wheel trim covers or brake disc covers etc.

Warning note

Modifications to the air supply and air outlet of the brake system are not permitted. Modifications to the steering and brake system can result in these systems no longer working correctly and failing. This may result in the driver losing control of the vehicle and causing an accident. Overheating of the brake system can result in tyre damage in addition to reduced braking performance. Therefore a sufficient supply of cooling air shall always be ensured.

Warning note

Modifications to brake components (e.g. brake callipers, discs, ...) and sensors are not permitted. Modifications to brake components can result in these systems no longer working correctly and failing. This may result in the driver losing control of the vehicle and causing an accident.

7.1.3.6 Additional brakes/retarder

A safety certificate from the responsible department is required for the subsequent installation of additional brakes.
You will find further information on this in chapter 7.5.5 “Additional brakes/retarder” and in the description of the electrical interface in chapter 6.14 “Preparation for retarder”.
A preparation for the installation of a retarder is available as optional equipment (PR no. 1H5). The responsible department will advise you on the content of the optional equipment (see chapter 2.1 “Product and vehicle information for body builders”).

Information

You will find further information on this in 7.5.5 “Additional brakes (retarder)” and in the description of the electrical interface in 6.14 “Preparation for retarder”.

7.1.4 Pneumatic suspension

Warning note

The use of springs and shock absorbers that do not correspond with the properties of the standard parts or parts with safety certificates or the parts available as optional equipment is not permitted. This applies in particular to the subsequent installation of pneumatic suspension on the front axle. Otherwise the ESC system in vehicles with ESC will no longer function correctly and will fail. This may result in the driver losing control of the vehicle and causing an accident.

Warning note

If attachments are fitted to the front frame of vehicles with airbags, the airbag units can no longer deploy correctly due to the changed crash structure. This applies in particular to the subsequent installation of pneumatic suspension on the front axle. Therefore it is not permitted to install pneumatic suspension on the front axle later on.

Practical note

Make sure the pneumatic suspension is ready for operation before you start to drive. The driver shall comply with the information in the operating instructions from the system supplier of the pneumatic suspension.

7.1.5 Wheels/tyres

Warning note

Only use tyre types and tyre sizes approved for your vehicle type and observe the tyre load rating and speed index required for your vehicle.
Also observe in particular the national approval regulations for tyres. In some cases, these regulations specify a certain tyre type for your vehicle or prohibit certain tyre types that are permitted in other countries.
If other wheels are fitted:

- the wheel brakes or running gear parts could be damaged.
- the free movement of the wheels and tyres is no longer guaranteed.
- the wheel brakes or running gear parts can no longer work correctly.

The body builder shall ensure that:

- The spacing between the tyre and the wing or wheel housing is sufficient even when snow or anti-skid chains are fitted and with full compression (even with axle distortion). Information about this (see 7.2.8.1 “Lowering wheel housing (panel van)”) shall be complied with.
- Only approved tyre sizes (see vehicle papers, offer drawings or the following table) are allowed to be used.
- Only approved wheels are allowed to be used.

Information

You can obtain further information of wheels/tyres from any Volkswagen customer service department or in chapter 3.10 "Optional equipment".

Gross weight [t]	Equipment		Tyre size	Weight and speed index
3.0			205/75 R16 C	110/108R
3.5			235/65 R16 C	115/113R
	[2]		235/60 R17 C	117/115R
	[3]		225/75 R16 C	116/114R
3.88			235/65 R16 C	121N (116R)
4.6			195/75 R16 C	107/105R
	[1]	FA RA	235/65 R16 C 285/65 R16 C	115/113 R 128N (116R)
	[2]		205/75 R16 C	110/108R
5.0			195/75 R16 C	107/105R
	[2]		205/75 R16 C	110/108R

[1] With optional equipment Super-Single

[2] Optional equipment

[3] Heavy-duty suspension version

7.1.6 Spare wheel

The Crafter is equipped with tyre sealant as standard. Country-specific equipment or optional equipment can include a spare wheel.

When attaching, please note:

- Attaching as shown on the chassis drawing under the frame, on the side of the frame or on the body
- Observe legal requirements
- Easy to access and use
- Double-protected against loss

7.2 Body-in-white/bodywork

7.2.1 General information on body-in-white/ bodywork

Changes to the body are not allowed to impair the function and strength of units and operating devices of the vehicle, neither may they reduce the strength of weight-bearing parts.
During vehicle conversions and installation of bodies, it is not permitted to make any modifications which impair the function and freedom of movement of the suspension (e.g. for maintenance and inspection work) or the accessibility to the same.

The following shall be observed:

- With all-wheel vehicles, wheelbase changes are not permitted.
- With 4x2 vehicles (rear-wheel drive), wheelbase changes are permitted under limited circumstances.
- With wheelbase changes on 4x2 vehicles with ESC, parameterisation of the ESC and the electronic ignition lock is necessary using the VAS tester (see 7.2.5 “Wheelbase changes”).
- The function of the Tyre Pressure Monitoring System (TPMS) can be impaired by modifications in the direct vicinity of the aerials and wheels (see 6.12 “Tyre pressure monitoring system”).
- Interventions in the cross-member structure from the front end to the rear of the B-pillar are not allowed.
- Modifications in the roof area and on the rear gate are not allowed.
- The clearance for the fuel filler neck as well as for the tank and fuel lines shall be maintained (see 7.3.1 “Fuel system”).
- Avoid corners with sharp edges.
- If additional equipment is attached to frame longitudinal and cross members, brackets (hole welding) shall be used and a safety certificate is required (see chapter 2.2 “Body builder guidelines, consulting”).
- Neither drilling nor welding is permitted on the A and B-pillars.
- The C and D-pillars (rear gate) is not allowed to be cut including the corresponding roof cross struts.
- The permitted axle loads are not allowed to be exceeded.
- The function of trailer connections shall be checked.
- If a towing bracket is fitted, the necessary reinforcements shall be present (see 7.6.7 “Towing bracket”).
- Holes in the frame longitudinal member are the result of the production process and are not suitable for attaching add-ons, bodies, installations and conversions; otherwise, the frame may be damaged.
- If superstructures are fitted on the chassis of base vehicles, a tank sender protector will be necessary depending on the body. See 7.3.1 “Fuel system”.

Warning note

The wooden floor (PR no. 5BD) fitted at the factory is an integral part of the vehicle structure in panel vans. If the wooden floor in these vehicles is removed, plastic deformation of the load compartment floor and problems securing cargo could result. Therefore never remove the wooden floor fitted at the factory

Practical note

A safety certificate from the responsible department is required for major modifications to the wooden floor (see chapter 2.2 “Body builder guidelines, consulting”).

7.2.1.1 Frame longitudinal member profile dimensions

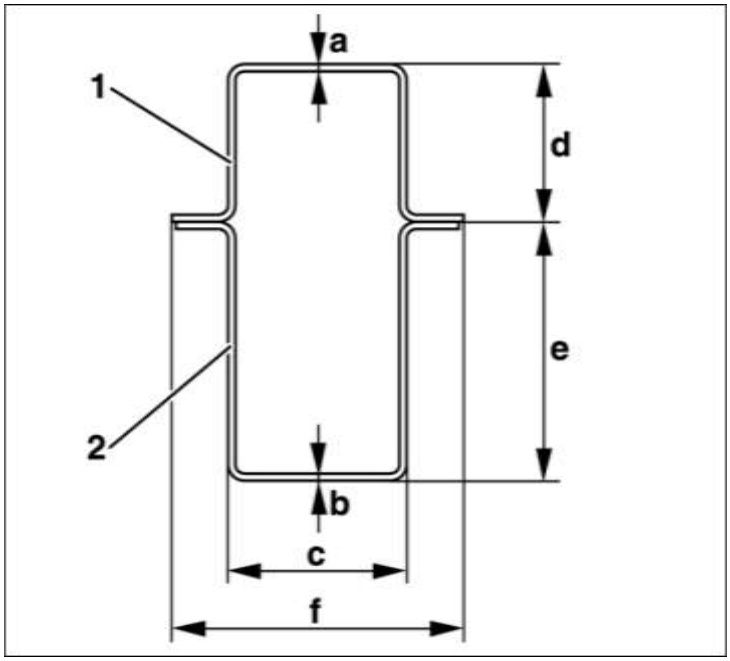

Dimensions of upper chord and lower chord

[1] Upper chord

[2] Lower chord

Gross vehicle weight rating [t]	a	b	c	d	e	f
3.5 Chassis	2	2	70	61	119 84[1]	118
5 Chassis	3	3	70	80	120 100 [1]	126
3.5 panel van/window van		1.5	70	-	120 85[1]	93
5 panel van/window van		3	70	-	120 100[1]	118

1 In the area of the rear axle

Frame longitudinal member 3.5 t

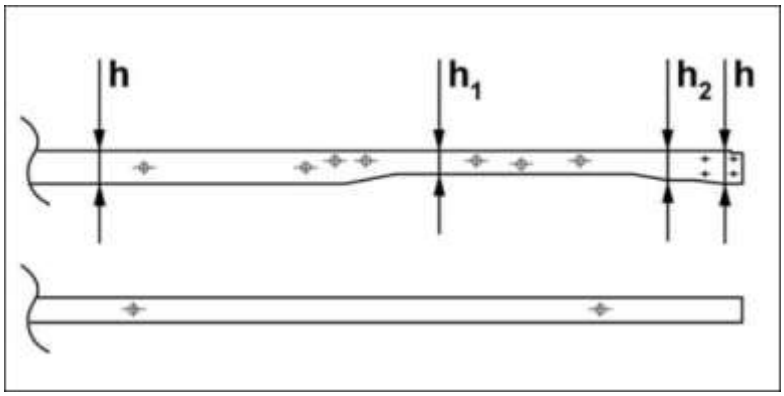

Dimensioning of frame longitudinal member lower chord

h	120 mm
h1	85 mm
h2	110 mm

Frame longitudinal member 5 t

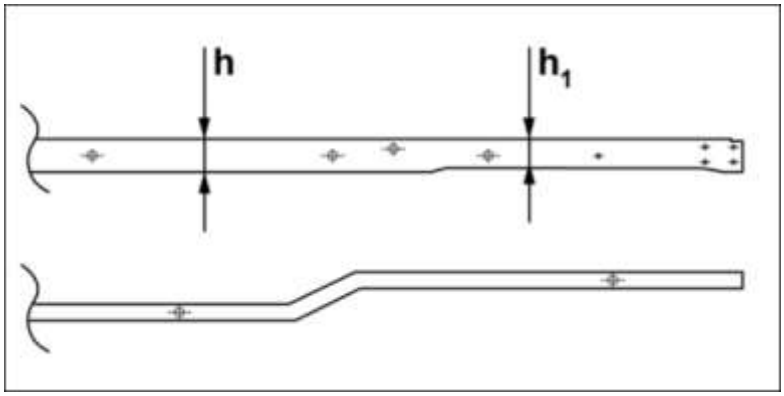

Dimensioning of frame longitudinal member lower chord

h	120 mm
h1	100 mm

7.2.1.2 Welding on body-in-white

Welding work is only allowed to be carried out by specialist personnel.

Information

You will find further information on welding work in the chapters 3 “Planning bodies”, 5 “Damage prevention” as well as 7.2.1 “General information on body-in-white/body-work” and the “Electronic Repair and Workshop Information” (erWin) of Volkswagen AG.

Welding work is not permitted on the upper and lower chord of the chassis frame.
Hole welding is only permitted in the vertical webs of the frame longitudinal member.
Welding is not allowed in bending radii.

Warning note

Unauthorised drilling or welding in the vicinity of the airbags can cause the airbag units to no longer function correctly (e.g. unintended ignition during operation; complete failure), see 7.4.2.3 “Frontal airbag”. Welding in the area of airbags is therefore prohibited.
The handling, transporting and storage of airbag units are subject to the laws on potentially explosive substances.

7.2.1.3 Drilling on the frame

Practical note

Existing holes on the frame longitudinal member result from the production process and are only allowed to be used with a safety certificate from the responsible department (see 2.2 “Body builder guidelines, consulting”).

Holes are only allowed to be drilled into the web of the longitudinal member according to the illustration below and in conjunction with spacer bushes that are welded onto the longitudinal member.

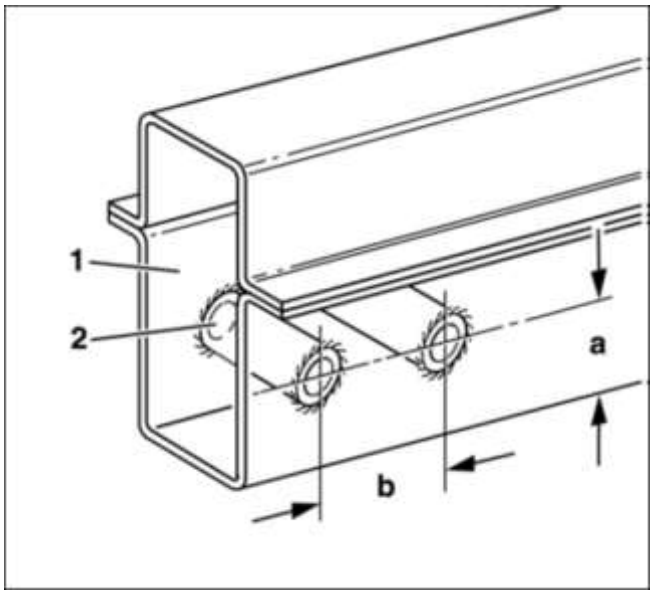

Drill holes on frame longitudinal member

[1] Chassis frame

[2] Spacer bushes

a Distance is at least 20% of the frame height

b Hole distance at least 50 mm

After drilling, deburr and grind all holes, remove chips from the frame and inject cavity sealant through the holes.

Practical note

After all work on the vehicle, it is necessary to comply with the specified corrosion protection measures (see chapter 5.3 "Corrosion protection measures").
Drilling is not allowed:

- On the upper and lower chords of the frame (except for holes at the rear end of the frame).
- In the area of supporting parts for the rear axle and on parts attached to the frame
- On load application points (e. g. spring hangers, brackets etc.).

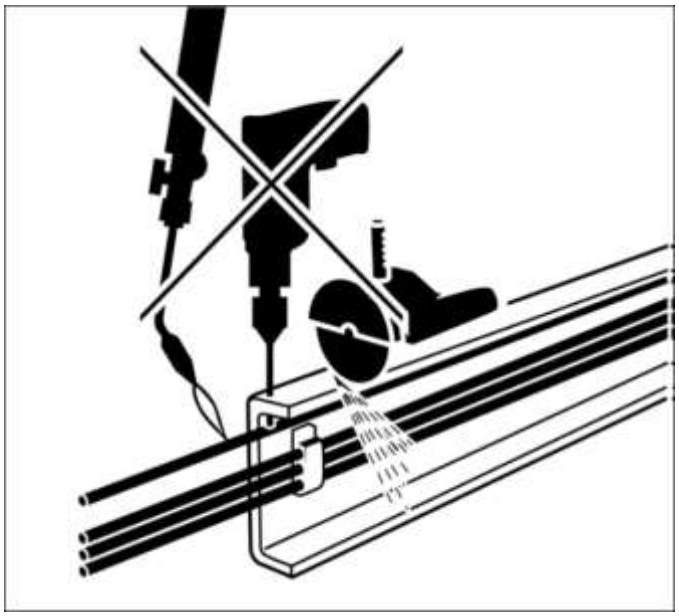

Warning note

Unauthorised drilling in the vicinity of the airbags can cause the airbag units in the standard vehicle to no longer function correctly (see chapter 7.4.2.3 "Frontal airbag"). Drilling in the area of airbags is therefore prohibited.
The handling, transporting and storage of airbag units are subject to the laws on potentially explosive substances.

7.2.2 Attachment to the frame

7.2.2.1 Attachment to front frame

The attachment of assemblies, bows etc. in the area of the front body and the front axle is not permitted since the structure required for passive safety can be impaired.

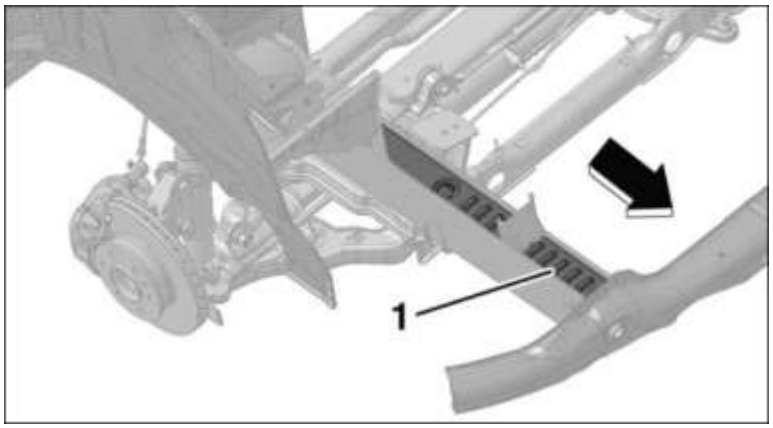

Structure for passive safety

[1] Crumple zone on subframe

Arrow direction of travel

Warning note

If attachments are fitted to the front frame, the function of the front crash structure and the function of the airbag units can be impaired.
If the crash structure is changed, it might become necessary to deactivate the airbag units. Attachments on the front frame are therefore only possible after consultation with the responsible department.

Practical note

Ease of repair of the standard vehicle shall be retained.

7.2.2.2 Attachment to rear frame

To attach ancillaries or add-ons to the frame at the rear, an attachment shall be created like the towing bracket that is available as optional equipment.
For the application of higher forces and torques, an additional support shall be added on the frame end cross member for torque support.

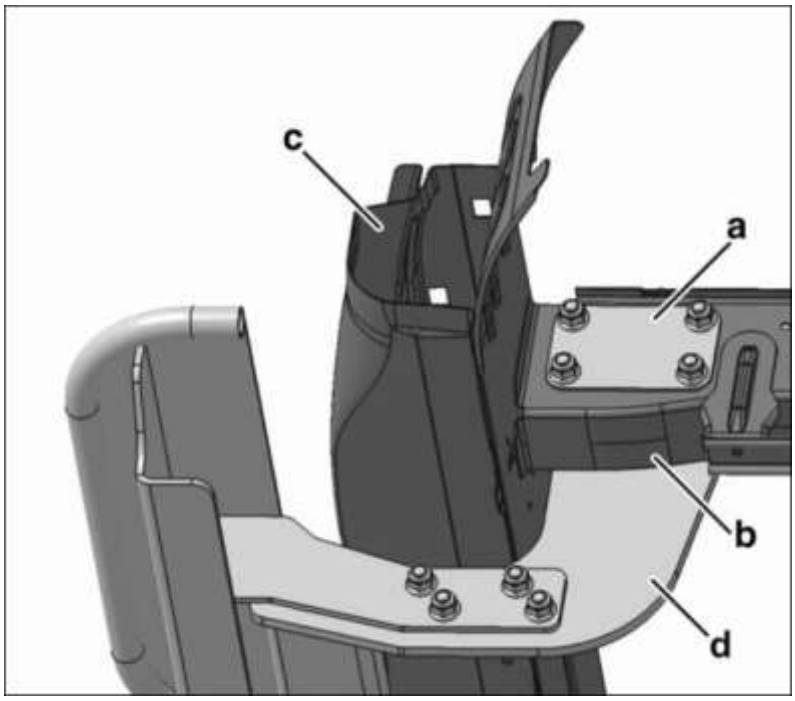

End cross member on frame longitudinal member (right)

a Attachment of the assembly stand on the frame longitudinal member

b Frame longitudinal member lower chord

c Frame end cross member

d Trailer towing coupling assembly stand

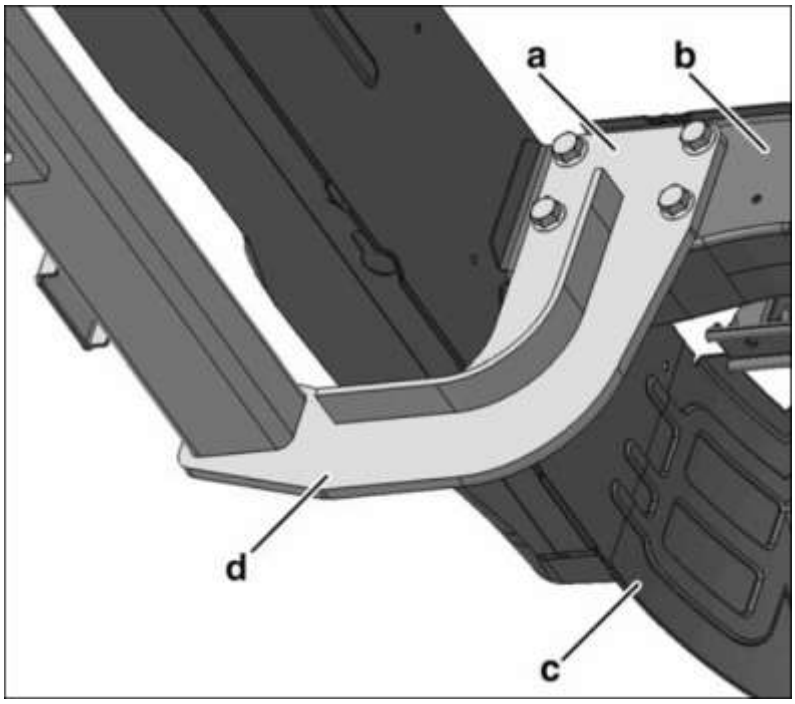

End cross member on right frame longitudinal member from inside

a Attaching the assembly stand to the frame longitudinal member

b Frame longitudinal member lower chord

c Frame end cross member

d Towing bracket assembly stand

A safety certificate from the responsible department is required.

You will find further information on hole patterns for the different towing bracket versions in chapter 10.3 "Hole patterns for towing bracket".

7.2.2.3 Attachment with body brackets

All of the body brackets provided at the factory are to be used for securing superstructures to the vehicle frame. Further information is available in chapter 8.1.4 "Attachment to the frame".

7.2.3 Material for chassis frame

If the wheelbase is modified and the frame is lengthened, the material of the extension piece shall correspond with the production chassis frame in terms of quality and dimensions.

Material	Ultimate yield strength	Tensile strength
H240LA	260-340	≥ 240
S235JRG2	≥ 235	340-510

7.2.4 Overhang extension

If the vehicle overhang is to be modified, this is basically possible if the permitted axle loads and the minimum front axle load are taken into account.
On vehicles with closed body (window or panel van), an overhang extension is only permitted after consultation with the responsible department (see 2.2 “Body builder guidelines, consulting”).

- If the frame is extended more than 350 mm an additional cross member shall be installed.
- Additional frame cross members shall have the function of a standard cross member.
- Standard body brackets shall be used at the end of the frame.
- The distance between the body brackets is not allowed to be greater than 500 mm.
- If the frame overhang is extended, the function of the trailer stabilisation and the maximum trailer weight specified in the vehicle papers shall be checked and, if necessary, reduced to zero, see chapter 4.3.4 “Vehicle overhang”.
- The frame overhang shall be reinforced accordingly.
- The permitted axle loads shall be observed.
- The permitted centres of gravity shall be observed.
- The minimum front axle load shall be observed in all load states (see chapter 4.1.1 “Steerability”).

The responsible department will provide additional information (see chapter 2.2 “Body builder guidelines, consulting”).

Maximum overhang lengths
If the following overhang lengths and the maximum rear axle load are observed, the original maximum trailer weight is retained and the function of the ESC is not affected.

Wheelbase l [mm]	Overhang length x [mm]
3250	1650
3665	1850
4325	2200

Information

The overhang length of the vehicle includes the total overhang related to the rear axle including the frame overhang extension and superstructures and add-ons.

Information

You will find information on profile dimensions for the frame longitudinal member in chapter 7.2.1.1 “Frame longitudinal member profile dimensions”

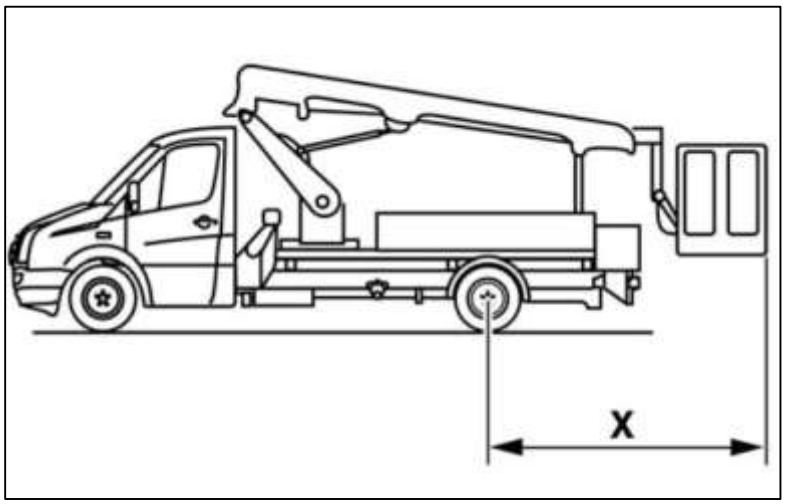

Maximum overhang length (diagram using example of elevated work platform)

x Vehicle overhang

If the underbody impact guard needs to be moved when the overhang is extended, the attachment shall correspond with that on the original vehicle (see 7.6.8 “Underbody impact guard”).
See illustration for frame extension with overhang extension.

3.0 t and 3.5 t vehicles

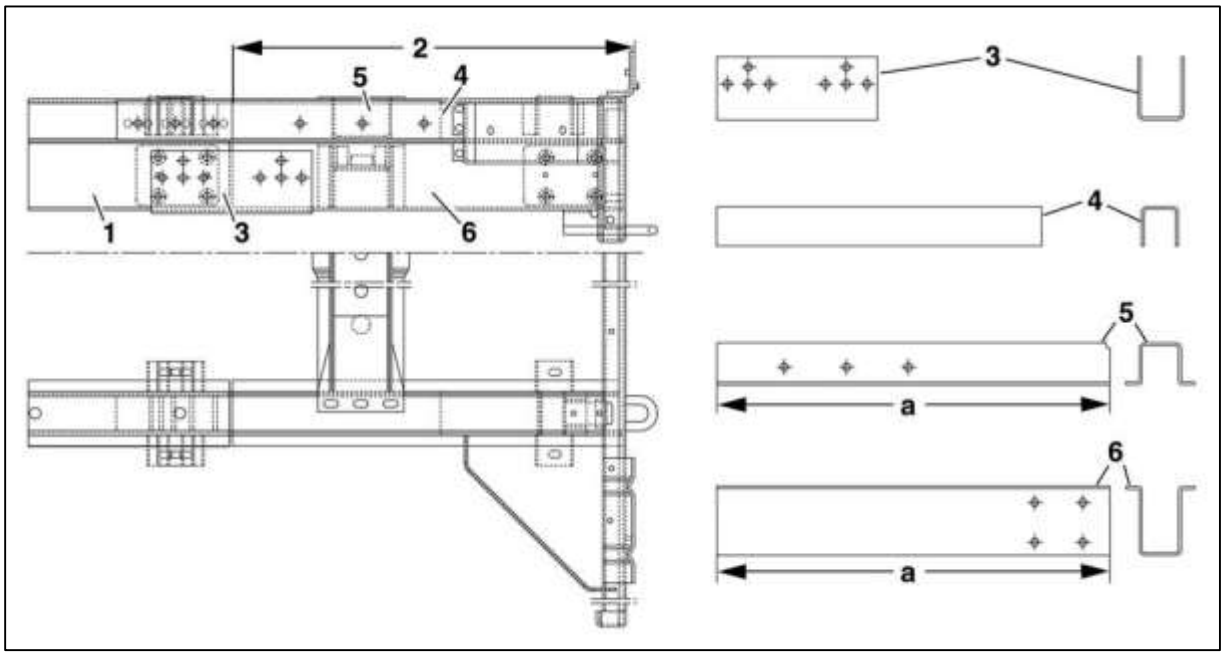

Frame extension for overhang extension

[1] Chassis frame longitudinal member

[2] Frame extension

[3] Exterior reinforcement

[4] Interior reinforcement

[5] Body carrier extension

(wall thickness 3.5t: 2 mm)

[6] Chassis frame extension

(wall thickness 3.5t: 2 mm)

a Measurement is set by body builder

Practical note

After all work on the vehicle, it is necessary to comply with the specified corrosion protection measures (see 5.3 “Corrosion protection measures”).

Practical note

Country-related regulations and guidelines shall be complied with.

4.6 t and 5.0 t vehicles

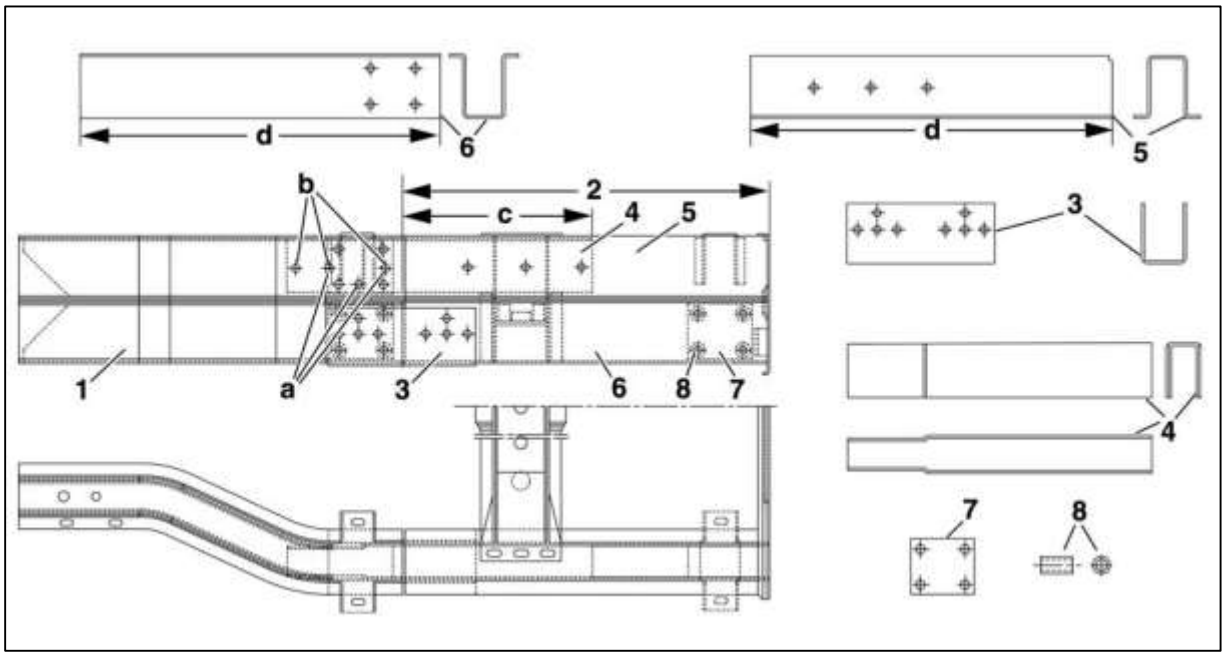

Frame extension for overhang extension

[1] Chassis frame longitudinal member

[2] Frame extension

[3] Exterior reinforcement

[4] Internal reinforcement (wall thickness 5 t: 3 mm)

[5] Body carrier extension

[6] Chassis frame extension (wall thickness 5 t: 3 mm)

[7] Reinforcement plate at least 2 mm

[8] Spacer bushing pipe 24 x 4 M-steel or St 35 NBK

a Drill holes wheelbase 3665 mm

b Drill holes wheelbase 4325 mm

c 350 mm (wheelbase 3665 mm) 300 mm (wheelbase 4325 mm)

d Measurement is set by body builder

Practical note

Country-related regulations and guidelines shall be complied with.

7.2.5 Wheelbase modifications

Warning note

Wheelbase changes outside the specifications listed below may result in vehicles with ESC no longer functioning as intended with this system. This can cause the driver to lose control of the vehicle and result in an accident (see 6.9 "Electronic Stability Control (ESC)").

To avoid accidents, it is necessary to carefully follow the instructions and limitations specified in this section.

In addition, observe relevant country-specific regulations.

With all-wheel vehicles, wheelbase changes are not permitted.
On the basis of vehicle registration provisions of the EU28 countries (Crafter with standard rear-wheel drive), wheelbase changes are possible with 4x2 vehicles with the following restrictions:

- With 4x2 vehicles with the electronic stability program ESC, wheelbase changes must be only made to reach the standard wheelbase of 3,665 mm and 4,325 mm.
- For all 4x2 vehicles with ESC and altered wheelbases, parameterisation of the ESC and the electronic ignition lock on the VAS tester is required. Please contact your Volkswagen customer service or the responsible department if you have questions (see 2.1 "Product and vehicle information for body builders").
- If the wheelbase is to be modified, a chassis with the next smallest standard wheelbase shall be used.
- If the frame is extended more than 350 mm an additional frame cross member shall be installed.
- Additional frame cross members shall have the function of a standard cross member. The clearance for the drive shaft shall be observed.
- Wheelbase changes by moving the rear axle are not permitted
- Align the chassis horizontally before cutting the frame longitudinal member.
- Place cutting points so that no existing drill holes on the frame longitudinal member are cut.
- Support the frame. Make wheelbase modifications from the next smallest standard wheelbase (example: if required wheelbase is 4700 mm, then choose 4325 mm standard wheelbase).
- Note changed values for chassis weight and turning circle.

Information

Please contact your Volkswagen customer service or the responsible department if you have questions (see 2.1 "Product and vehicle information for body builders").

Frame cuts are not permitted in the vicinity of:

- Load application points (e.g. spring hangers)
- Axle guides, axle suspension
- Profile modifications (offset frame, tapered frame)
- Drill holes

Please also note 6.4.3 “Extending cables”, 7.1.2 “Brake system” and 7.3.6 “Drive shafts”.

7.2.5.1 Cuts on frame

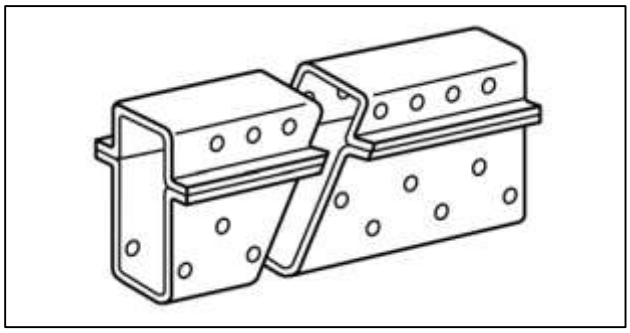

“Diagonal” frame cut, taking example of frame longitudinal member on chassis

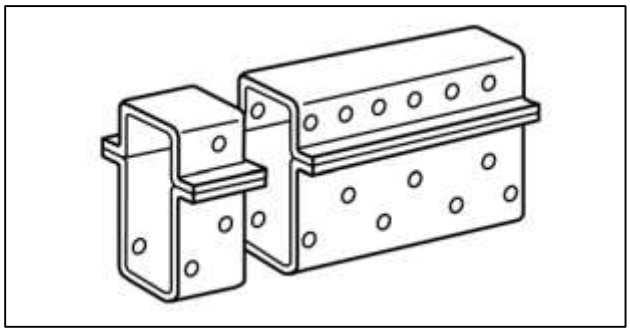

“Straight” frame cut, taking example of frame longitudinal member on chassis

7.2.5.2 Recommended frame cutting areas

Cutting in the area of frame inserts shall be avoided for subsequent wheelbase extensions. We recommend the areas specified for the respective wheelbases (see table, see figure).

Wheelbase [mm]	Gross vehicle weight rating [t]	AF [mm]	AR [mm]
3665	3.5/3.88	2330	1295
4325	3.5/3.88	2330	1335
3665	4.6/5.0	2330	1295
4325	4.6/5.0	2330	1250

Values relate to the chassis with cab

AF - Distance to centre of front axle, AR - Distance to centre of rear axle

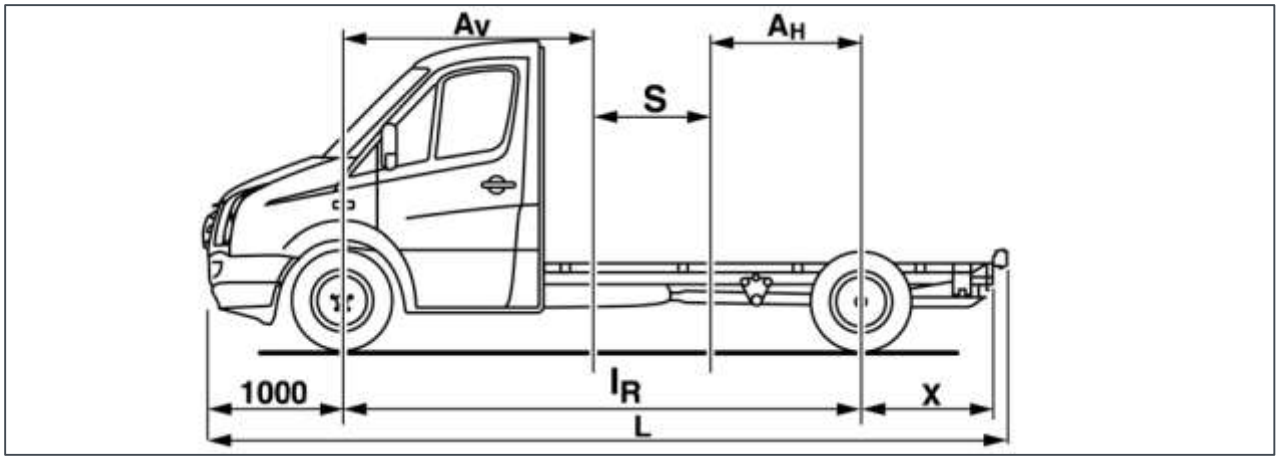

Frame cutting area

L Length of whole vehicle

LWB Length of wheelbase

X Standard vehicle overhang

S Recommended cutting area

AR Distance from rear axle to cutting area

AF Distance from front axle to cutting area

Practical note

On 5 t vehicles with 4325 mm wheelbase and PR no. 1H5 “Preparation for retarder”, the cutting area must be at A_F = 2330 mm.
Otherwise the retarder preparation cannot be used correctly.

7.2.5.3 Reinforcement of frame cutting areas

The cutting areas shall be reinforced with frame inserts if the frame is extended by the body builder. The specified covering and the material properties of the frame inserts shall be observed.
Wheelbase extensions shall be made as follows:

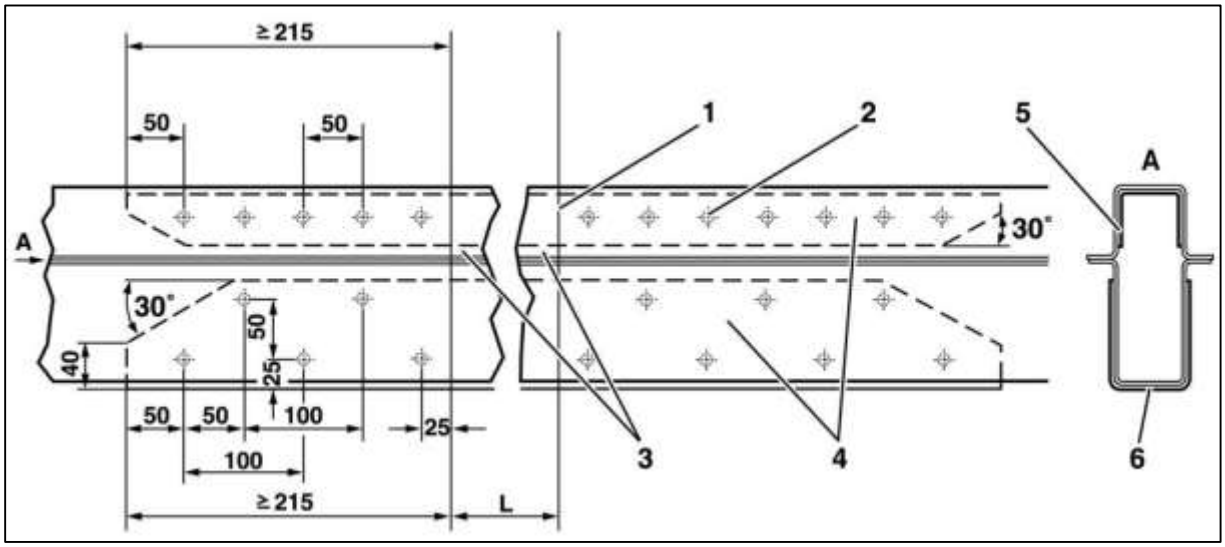

Configuration of frame inserts, taking example of frame longitudinal member on chassis

[1] Joins welded all round

[2] Plug welding, hole diameter 12 mm

[3] Material quality of top-hat profile inserted corresponding with standard

[4] Inserts, material at least St 12.03, material thickness 2 to 3 mm

[5] Insert for upper chord (inner)

[6] Insert for lower chord (outer)

L Wheelbase extension

Please ensure that the end of the exhaust pipe is not directed at a tyre following wheelbase modifications.
After wheelbase modifications, the chassis shall be reinforced with a full-length assembly frame (see chapter 8.1 “Assembly frame”).
If the assembly frame is also extended when the overhang is extended, the weld seams shall be arranged offset by at least 100 mm (see illustration).

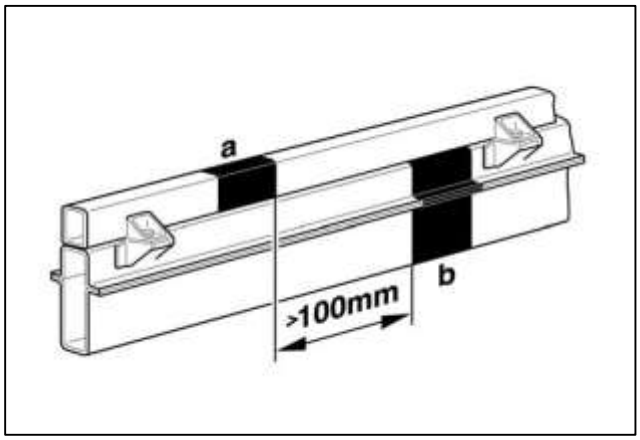

Overhang extension vehicle frame with assembly frame

a Extension of assembly frame

b Extension of frame

Practical note

If the wheelbase of the vehicle is modified, the length of the drive shaft shall be adapted to the vehicle. Lengthening shall be performed by a company qualified for drive shaft manufacture.
After all work on the vehicle, it is necessary to comply with the specified corrosion protection measures
(see 5.3 “Corrosion protection measures”).

7.2.5.4 Safety certificate for wheelbase modifications

More information on wheelbase modification and, if necessary, corresponding safety certificates can be obtained from the responsible department.

When sending inquiries, please include two drawings of the conversion and the body giving the following details:

- Position of the cut,
- Reinforcement measurements,
- Drive shaft line,
- Indication of purpose.

7.2.6 Modifications to cab

A safety certificate from the responsible department is required for all modifications to the cab.
Fixed installations or conversions must meet the criteria of legislation relating to head impact acc. to ECE Regulation ECE-R 21 and FMVSS 201.

Warning note

Changes to the cab are not allowed to impair the function of any safety-relevant components (such as airbag units, sensors, pedals, selector lever, cables, lines and the like). This can lead to a failure of components or safety-relevant parts.

Practical note

If the tank cap or parts placed on the tank cap are removed, blocking can occur in an accident. As a result, the survival space in the B-pillar can no longer function correctly. Covering with trim parts and securing “blocking” parts to the B-pillar is not permitted.

The strength and rigidity of the cab structure are not allowed to be reduced.
The air intake for the engine shall not be impaired.
The centre of gravity is affected by modifications to the cab. The permitted centre of gravity limits and axle loads shall be observed.

Practical note

After all work on the vehicle, it is necessary to comply with the specified corrosion protection measures (see chapter 5.3 "Corrosion protection measures").

7.2.6.1 Modification of cab roof general information

Warning note

Later modifications to the headliner or the roof skin are not permitted if the vehicle is equipped with a window bag between the A-pillar and the B-pillar. Otherwise the window bag might no longer deploy correctly (e.g. delayed or incomplete deployment of the window bag).

Modifications to the cab roof (e.g. roof lowering) are only possible after consultation with the responsible department or as described in 7.2.12 "Cutting cab roof and B-pillar roof cross strut".

The "electric sliding roof" ("glass sliding/tilting roof in cab (electrically operated) with blind") PR no. 3EF can be supplied from the factory as optional equipment (see 3.10 "Optional equipment").
Plastic roofs are only suitable for the installation of roof hatches to a certain extent.
The roof load capacity is limited (see 4.3.7 "Vehicle roof/roof load").

Practical note

Roof cross struts or weight-bearing parts are not allowed to be removed without replacement or to be reworked.

Information

You will also find information on cab superstructures and air baffles in chapter
7.6.1 "Air baffles".

The permitted centre of gravity and the permitted axle loads shall be observed.

7.2.6.2 Modifications to cab rear wall

If it becomes necessary to make a cut in the back wall of the cab then this is possible in conjunction with a frame around the outline of the cut (bio diesel). The replacement rigidity provided by the frame must be at least that of the original rigidity.
Partitions can be removed completely or partially. Also refer to 8.4 "Modifications to closed panel vans".

Warning note

Later modifications to the headliner or the roof skin are not permitted if the vehicle is equipped with a window bag between the A-pillar and the B-pillar. Otherwise the window bag might no longer deploy correctly (e.g. delayed or incomplete deployment of the window bag).

7.2.7 Sidewall, windows, doors and lids

7.2.7.1 Sidewall

If modifications are made to the sidewall on the panel van or window van, replacement rigidity corresponding with the base vehicle shall be provided.
The function of the roof frame is not allowed to be impaired and shall be retained.
A safety certificate from the responsible department is required.

Practical note

After all work on the vehicle, it is necessary to comply with the specified corrosion protection measures
(see 5.3 "Corrosion protection measures").

Information

You will find further information on modifications to the sidewall in chapter 7.6.4 "Shelf installation/ installations in vehicle interior".

7.2.7.2 Windows

Windows shall be fitted with a sturdy frame. This frame shall be connected to other body elements by means of a force-locking connection.
If the supporting structure (pillars, reinforcements and cross strut mountings) of the base vehicle is modified to fit windows (panorama window), replacement rigidity corresponding with the base vehicle shall be provided.

If the body builder is fitting its own windows, a vehicle "without rear window" is available from the factory with the PR no. 4HA.

Practical note

Fitting panorama windows in the panel van by cutting the stamped window outline without a corresponding replacement rigidity is not permitted. Otherwise the sidewall could be damaged.

Information

A safety certificate from the responsible department is required for conversions involving the cut-out of stamped window outlines with rigidity measures. Please contact the hotline of the Conversion Portal, your direct point of contact at the body manufacturer support or the responsible importer (see 2.1.1 "Contact in Germany" and 2.1.2 "International contact").

If the body builder fits its own windows in the rear pivoting doors, the following shall be observed in conjunction with the PR no. 8M1 "Wiper on rear pivoting door" ("Rear window intermittent wash/wipe system"):

- To ensure perfect function of the rear window wiper, the geometry of the windows supplied by the body builder shall correspond with the windows available as standard.
- The wiper blades of the rear window wiper shall rest against the window across the whole wiping area.
- The thickness of the rear windows shall be 3 mm.
- The rear windows shall not protrude over the door trim.

7.2.7.3 Doors and flaps

If the supporting structure (cross members, frame, pillars, reinforcements and cross strut mountings) of the base vehicle is altered by modifying doors, replacement rigidity corresponding with the base vehicle shall be provided.
The trigger sensor for the occupant protection systems is located in the door body on vehicles with window or thorax bag.
Modifications to the door body are not permitted.

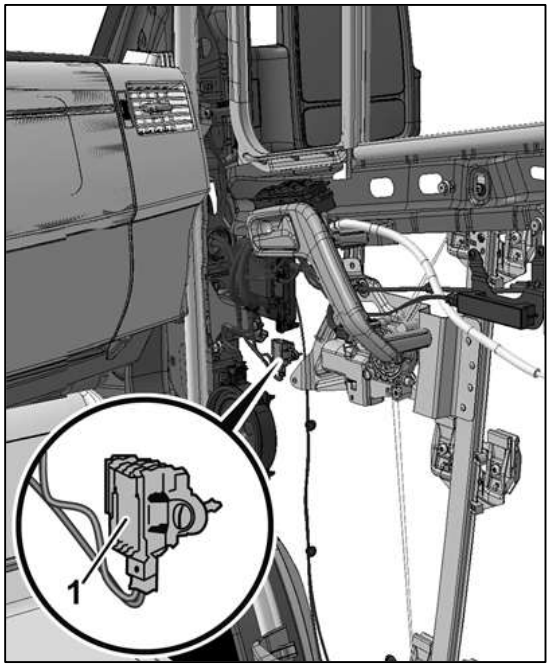

Door body with sensors

1 Pressure sensor

(trigger sensor for the occupant protection systems)

Seats in the camper and passenger compartment shall be accessible from outside through a door or from the cab.
Locked doors shall also be quick and easy to open from the inside.
The doors shall open far enough and the entries shall be designed so that safe and comfortable access is possible.
The distance between the road and the lowest step is allowed to be a maximum of 400 mm.
Installed components shall allow for sufficient clearance to the inside handles in all positions (anti-trap protection).
Modifications to the lock system in the immediate vicinity of the door and in the area of the pillars/cross members are not permitted.
After all work on the vehicle, it is necessary to comply with the specified corrosion protection measures
(see chapter 5.3 "Corrosion protection measures").

7.2.7.4 Rear gate

Modifications to the rear gate including the roof area are only permitted in exceptional cases and with a safety certificate from the responsible department.
After all work on the vehicle, it is necessary to comply with the specified corrosion protection measures
(see chapter 5.3 "Corrosion protection measures").

7.2.8 Wings and wheel housings

The spacing between the tyre and the wing or wheel housing is sufficient even when snow or anti-skid chains are fitted and during full compression (even with axle articulation). The measurements in the offer drawing shall be taken into consideration.

Warning note

The attachment of seats to the wheel housing is not permitted. This also applies to wheel housings that are lowered. Otherwise damage could be caused to the vehicle (e.g. wheel housing and tyres) and accidents could result.

After all work on the vehicle, it is necessary to comply with the specified corrosion protection measures (see chapter 5.3 "Corrosion protection measures").
Making the wheel housing narrower is not permitted.

7.2.8.1 Lowering wheel housing (panel van, window van)

It is possible to lower the wheel housings if the following requirements and limit values are met:

- Components or sharp edges (e.g. folds) shall not protrude into the wheel housing.
- The measurement for the maximum permitted lowering is not allowed to be exceeded by any component in the wheel housing.
- Unrestricted use of snow chains is not possible: The entry "snow chain usage only possible to limited extent" needs to be made in the vehicle documents.

Wheel housing lowering/clearance requirement

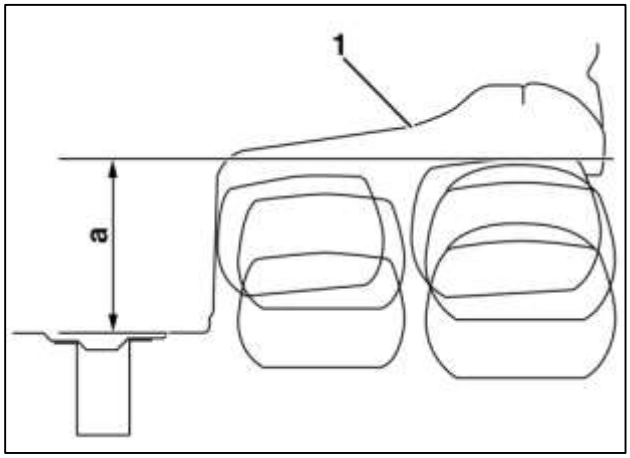

Clearance requirement

[1] Contour of production wheel housing of panel van

a Clearance requirement

The minimum distance of the wheel housing is measured from the floor of the panel van to the lowest point on the wheel housing contour.

Gross vehicle weight rating [t]	Tyres	Dimension a [mm]
3.5 (straight frame longitudinal member)	205/75R16	260
	235/65R16	260
4.6 in conjunction with PR no. 1P6 (frame longitudinal member, tapered) 1P6 springs, softer at rear, stage 2 for load reduction *C36*	285/65R16	260
	2 x 195/75R16	200
	2 x 205/75R16	210
4.6 – 5 (frame longitudinal member, tapered)	285/65R16	260
	2 x 195/75R16	175
	2 x 205/75R16	185
3.5 (heavy-duty suspension version)	225/75R16	200
5.0 (heavy-duty suspension version)	205/75R16	190

7.2.8.2 Wheel housing made by body builder (chassis)

The following limit values shall be followed by the body builder for the configuration of wheel housings on chassis vehicles (for example, for box bodies):

- Components or sharp edges (e.g. folds) shall not protrude into the wheel housing.
- The measurement for the maximum permitted lowering is not allowed to be exceeded by any component in the wheel housing.
- Unrestricted use of snow chains is not possible: The entry "snow chain usage only possible to limited extent" needs to be made in the vehicle documents.

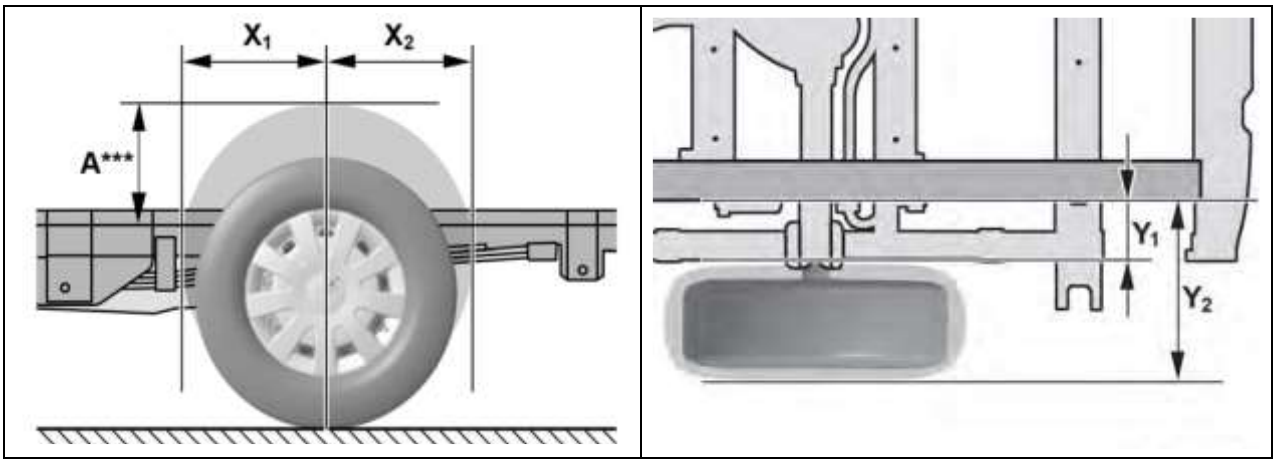

Limit values for wheel housing on chassis vehicle

Gross vehicle weight rating [t]	Tyres	Dimensions [mm]				
		X1	X2	Y1	Y2**	A***
8.5	205/75R16	410	410	195	520	260
3.5	235/65R16	410	410	195	520	260
4.6	285/65R16	445	445	245	635	260
4.6 – 5.0*	2 x 195/75R16	405	405	120	630	225
	2 x 205/75R16	410	410	115	635	235
3.5 (heavy-duty suspension version)	225/75R16	430	430	195	510	200
5.0 (heavy-duty suspension version)*	2 x 205/75R16	410	410	115	638	190

* With twin tyres, Y1 is used for the inside of the inner wheel and Y2 for the outside of the outer wheel.

** With maximum wheel housing panelling up to wheel centre.

*** Minimum distance from frame flange to wheel housing contour.

The minimum distance A of the wheel housing is measured from the flange between the upper and lower chord of the frame longitudinal member to the lowest point on the wheel housing contour. Dimensions Y1 and Y2 are measured from the outside edge of the frame flange on the frame longitudinal member.

Information

Further information can be found in chapter 4.3.4 "Wheel housing minimum dimensions for chassis".

7.2.9 Frame end cross member

For the attachment of special installations, the sheet metal rear cross member that serves as an underbody impact guard can be omitted at the factory (PR no. AT0 "without rear cross member") (see chapter 3.10 "Optional equipment").
You will find further information on the underbody guard in 7.6.8 "Underbody guard".

Practical note

After all work on the vehicle, it is necessary to comply with the specified corrosion protection measures (see chapter 5.3 "Corrosion protection measures").

Country-related regulations and guidelines shall be complied with.

7.2.10 Cowl panel

The cowl panel (chassis platform) provides body builders with a basis for fully integrated superstructures (e.g. mobile homes) or special constructions and is available from the factory with the PR no. F5K/ZW5 "Cowl panel" (see 3.10 "Optional equipment").

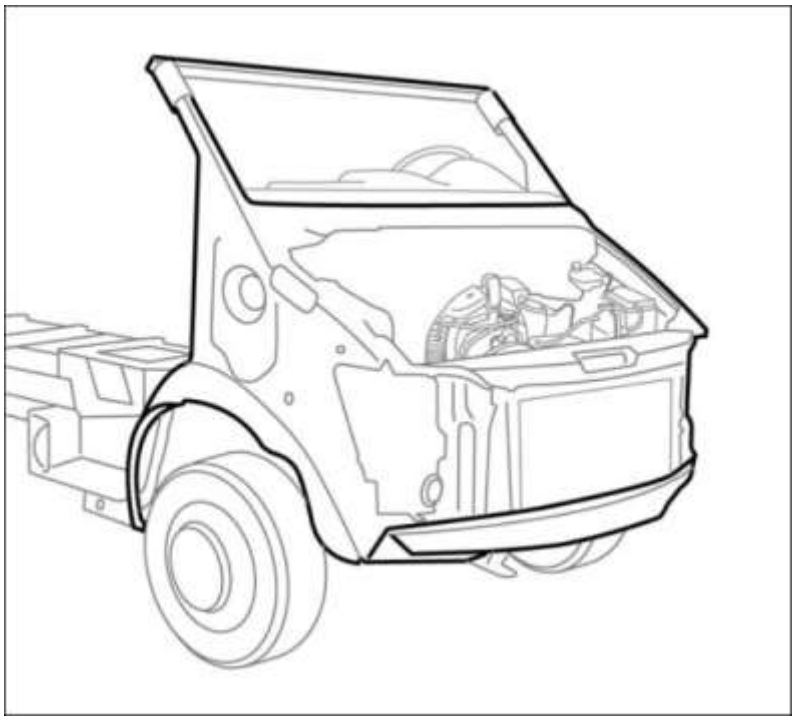

Cowl panel chassis

The regulations for building cowl panel chassis in accordance with chapter 8.5 "Bodies on chassis with platform".

Practical note

After all work on the vehicle, it is necessary to comply with the specified corrosion protection measures (see chapter 5.3 "Corrosion protection measures").

7.2.11 Roof of panel/window van

The following points shall be observed if modifications are made to the roof structure of a panel van/window van:

- Install anti-roll bar on front axle to reduce body roll.
- If the roof skin and roof cross struts are cut and an all-round profile frame is not possible, additional roof cross struts are required. The all-round concept shall be retained, and adequate replacement rigidity shall be guaranteed.
- To avoid functional impairments, the body limits for camera-based assistance systems shall be observed, see 6.16 "Rain/light sensor".

Practical note

The replacement rigidity of the new roof structure shall correspond to that of the standard roof.
Modifications on the rear gate and in the roof area are not allowed.
For all work on the vehicle, it is necessary to comply with the specified corrosion protection measures (see 5.3 "Corrosion protection measures").

7.2.11.1 Attachment on roof

Attachments similar to the roof rack are possible for subsequent attachment of add-ons (see 7.6.3 "Roof rack").
A safety certificate from the responsible department (see 2.2 "Body builder guidelines, consulting") is required for attachments to the roof skin (except for area illumination and spotlights).
A safety certificate from the responsible department is required for attachments on roof cross struts.

Warning note

Later modifications to the headliner or the roof skin are not permitted if the vehicle is equipped with a window bag between the A-pillar and the B-pillar. Otherwise the window bag might no longer deploy correctly (e.g. delayed or incomplete deployment of the window bag).

7.2.11.2 Increasing roof height

Modifications to the rear gate including the roof area are only permitted in exceptional cases and with a safety certificate from the responsible department (see 2.2.1 "Safety certificate")

Roof height increases are only allowed to be made using integrated crossrails and reinforcement frames.

The replacement rigidity of the new roof structure shall correspond to that of the standard roof.

Practical note

The replacement rigidity of the new roof structure shall correspond to that of the standard roof.

7.2.11.3 Number of roof cross struts

Wheelbase	Required number
3,250 mm	≥ 4 cross struts
3,665 mm	≥ 5 cross struts
4,325 mm	≥ 6 cross struts

7.2.11.4 Arrangement of roof cross struts

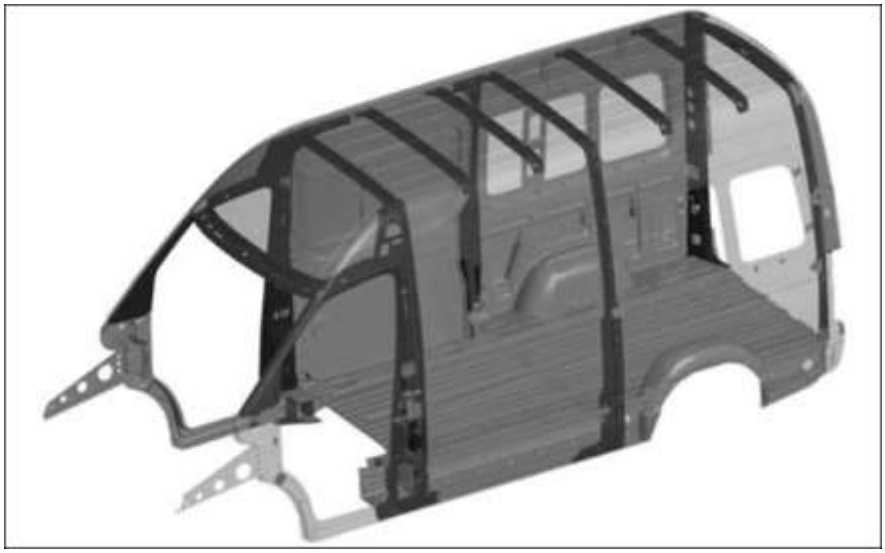

Panel van roof cross strut

Practical note

The cross struts shall be attached to the side walls in such a way that a force-locking connection is guaranteed (flexurally rigid connection between cross struts and roof frame).

If the roof is raised, the cross struts shall be reinforced accordingly.

The minimum moment of inertia Ix of each roof cross strut is given in the table below:

Roof height, increasing [mm]	**Moment of inertia Ix per cross strut [mm⁴]**
250	≥ 40000
400	≥ 65000
550	≥ 86000

If the roof height is unchanged or reduced, a minimum moment of inertia Ix=33,000 mm^4 for each cross strut shall be observed.
The maximum roof load of the metal high roof with even load distribution across the whole roof area is 150 kg (see chapter 7.6.3 "Roof rack").

Warning note

The maximum permitted centre of gravity shall not be exceeded. Otherwise the ESC system in vehicles with ESC will no longer function correctly and will fail. This can result in the driver losing control of the vehicle and causing an accident (see 6.9 "Electronic Stability Control (ESC)").

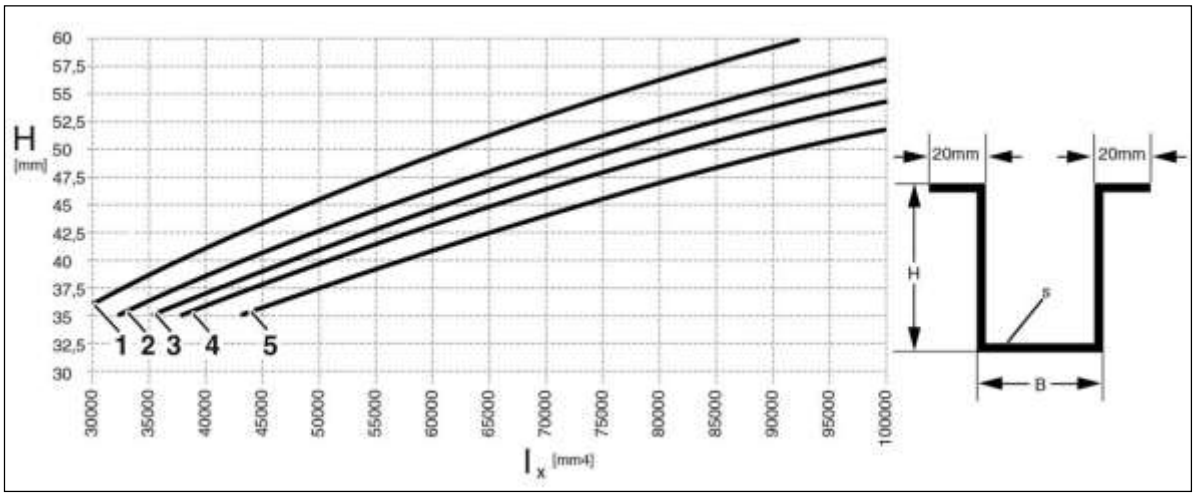

Required moment of inertia for cross struts with 20 mm flange to roof skin

No.	**B [mm]**	**s [mm]**
1	50	0.8
2	40	1.0
3	50	1.0
4	60	1.0
5	50	1.2

7.2.11.5 Retrofitting tilting sunroof

Warning note

Later modifications to the headliner or the roof skin are permitted if the vehicle is equipped with window and thorax bags between the A-pillar and the B-pillar. Otherwise the window and thorax bags can no longer deploy correctly (e.g. delayed or incomplete deployment of the window and thorax bags).

Plastic roofs are only suitable for the installation of roof hatches to a certain extent.
The roof load capacity is limited (see chapter 7.2.11.6 "Maximum roof loads").
If a tilting pop-up roof is installed, at least 2/3 of the original roof area shall be retained.

Practical note

Roof cross struts or weight-bearing parts are not allowed to be removed without replacement or to be damaged (see 7.2.11.2 "Increasing roof height").

7.2.11.6 Maximum roof loads

Panel van [kg] LH1	Panel van with high roof [kg] LH2	Panel van with extra-high roof [kg] LH3	Cab Double cab [kg]
300	150	0	100

The limit value for the maximum centre of gravity position of the vehicle is not allowed to be exceeded.

7.2.12 Cutting cab roof and B-pillar roof cross strut

For partially integrated superstructures, e.g. mobile homes or integrated boxes, the cab roof including the B-pillar roof cross strut can be cut if necessary in the specified area (see illustration):

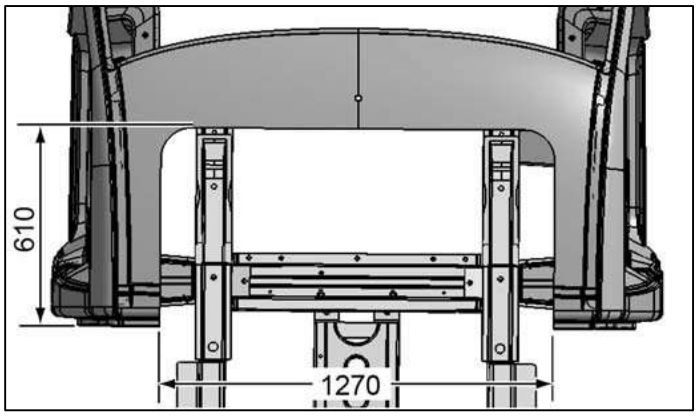

Permitted roof cuts

Practical note

If the B-pillar roof cross strut is cut, replacement rigidity shall be provided in accordance with one of the following variants.

A detailed assessment from the responsible department (see chapter 2.2 "Body builder guidelines, consulting") and a safety certificate are required for alternative replacement rigidity solutions used by the body builder.

7.2.12.1 Replacement rigidity when the B-pillar roof cross strut is cut

The following variants can be certified as safe by the responsible department (see 2.2 "Body builder guidelines, consulting"):

Variant 1: Sandwich construction/wooden board

The required replacement rigidity when the B-pillar roof cross strut is cut is added to the base vehicle by means of a wooden board or a sandwich construction with full-area gluing (e.g. with Sikaflex 221). The arched roof contours shall be adapted so they form a force-locking connection with the sandwich or wooden board by using an auxiliary structure.

Required flexural rigidity of sandwich construction/wooden board	
y axis	$EI_2 = 7 \times 10^8$ N/mm²
z axis	$EI_1 = 2 \times 10^{11}$ N/mm²

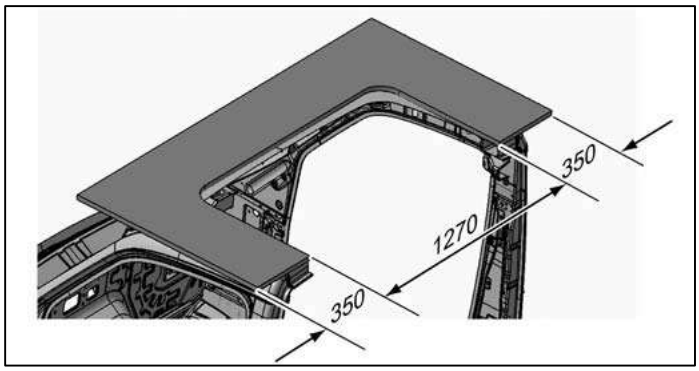

Replacement structure (sandwich construction/wooden board) glued completely to cut roof structure

Material properties	
Sandwich construction	**Wooden board**
Design: 2.0 mm GFRP 26.0 mm foam 2.0 mm GFRP	Design: 20.0 mm wood
E_{GFRP} = 12000 N/mm² E_{foam} = 80 N/mm²	E_{wood} = 3000 N/mm²

Variant 2: Welded structure under cab roof

The required replacement rigidity when the B-pillar roof cross strut is cut is added to the base vehicle by means of a welded structure under the cut cab roof.

Required flexural rigidity of welded structure	
y axis	EI_2 = 8.35 x 10 9 N/mm²
z axis	EI_1 = 2.36 x 10 11 N/mm²

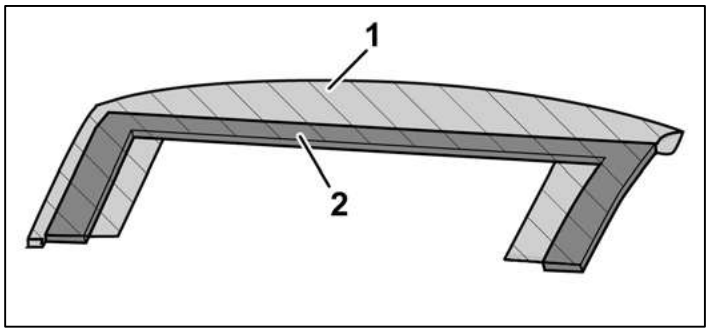

Welded structure

[1] Roof panelling

[2] Rectangular profile

Material properties of subframe
Material: at least DC01 or S235JRG2
Height = 20 mm
Width = 100 mm
Wall thickness = 1.5 mm
E = 210000 N/mm²

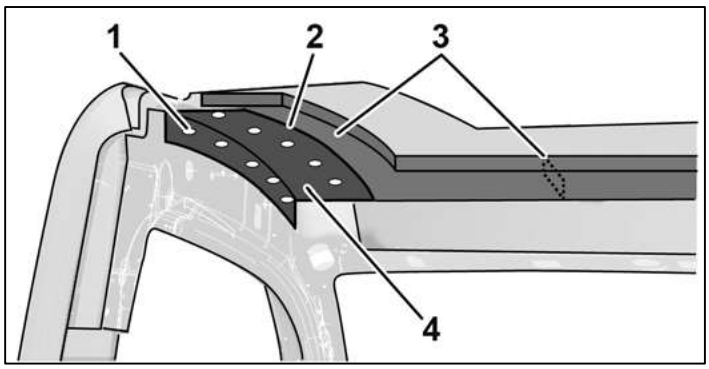

Welded structure

[1] Plug weld

[2] Overlapped seam

[3] Rectangular profile

[4] Closure plate

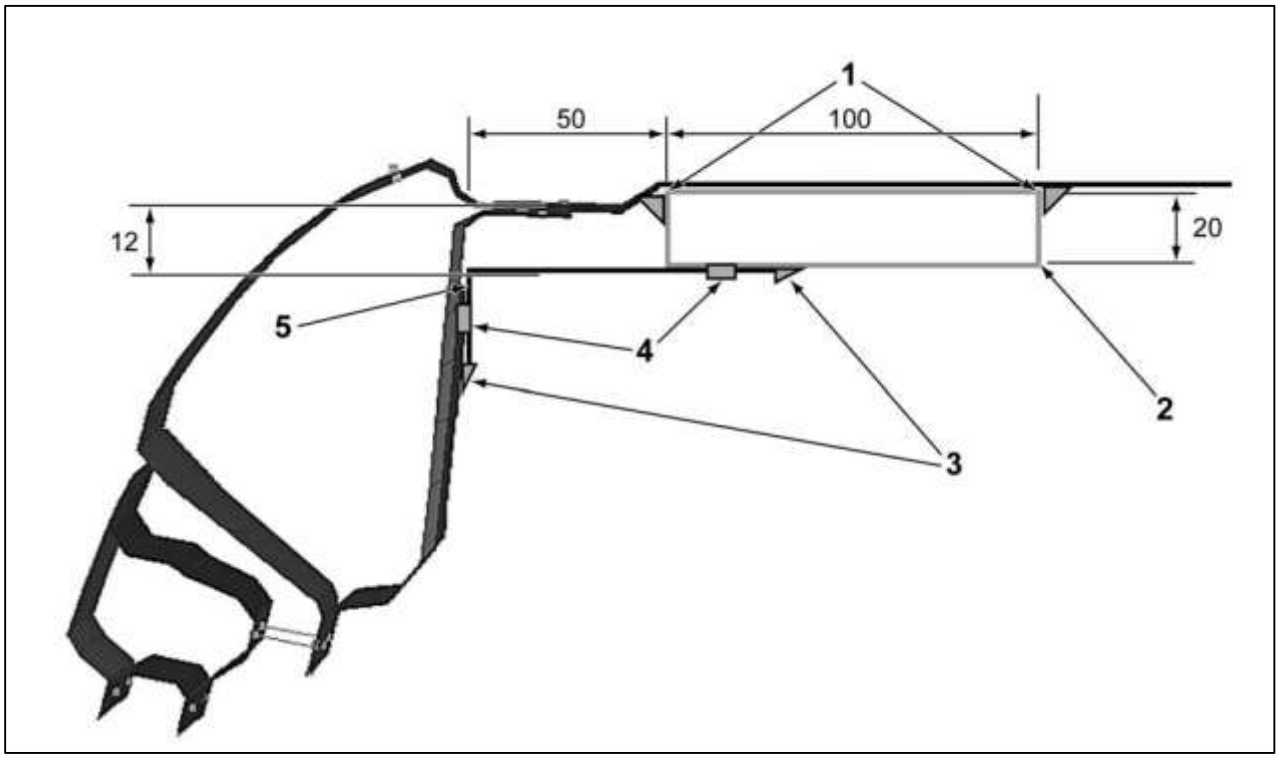

Cross-section of welded structure

[1] Fillet weld

[2] Rectangular profile (2 mm wall thickness)

[3] Overlapped seam

[4] Plug weld

[5] Closure plate

7.3 Engine peripherals/drive train

Practical note

The maintenance and repair of the vehicle shall not be hindered by the body (see 3.9 "Maintenance and repair").

7.3.1 Fuel system

7.3.1.1 General

No modifications are permitted to the fuel system, and any such modifications can result in invalidation of the vehicle's operating permit.
In the event that the fuel system must be modified, the body builder is solely responsible for the work being carried out correctly, including all the components and materials used.
A new operating permit must be applied for from the registration authority.

Practical note

Unauthorised modifications to the fuel system (tank, lines...) can lead to reduced performance and engine emergency operation.

Comply with the following points if making any modifications to the fuel system:

- The whole system must be permanently leak-proof in all operating conditions.
- Ensure good quality refuelling if modifications are made to the tank filler pipe, and avoid any siphon effect in the pipe routing.
- All components that come into contact with fuel shall be suitable for the particular type of fuel used (e.g. petrol/diesel, etc.) and the ambient conditions in the installation location.
- Hoses must retain their shape and remain adequately stable throughout the service life, in order to ensure that there is no constriction in the cross section (e.g. hoses acc. to DIN 73379-1).
- The hose connections shall have a suitable geometry (e.g. all-round bead) in order to make it harder for the hose to slip off. If necessary, install reinforcing support sleeves so as to prevent any constriction at the clip connection and to guarantee leak-tightness.
- At the connections, use spring-type clips which automatically compensate for possible settling behaviour of the material and to maintain the preload. Hose clips with worm threads must be avoided.
- All parts of the fuel filler system must be routed at a sufficient distance from moving parts, sharp edges and components at high temperature, in order to avoid damage.
- If superstructures are fitted on the cab of base vehicles, a tank sender protector will be necessary if the tank sender is not protected by the body. At the factory, the tank sender protector with part number
  2E0 201 283 B (shielding) is fitted to platform vehicles. It is fitted with the standard welding screws with two nuts with washers M6-8.

Practical note

If superstructures are fitted on the cab of base vehicles, the tank sender shall be protected against falling cargo depending on the body. Otherwise the base vehicle could be damaged and could fail.

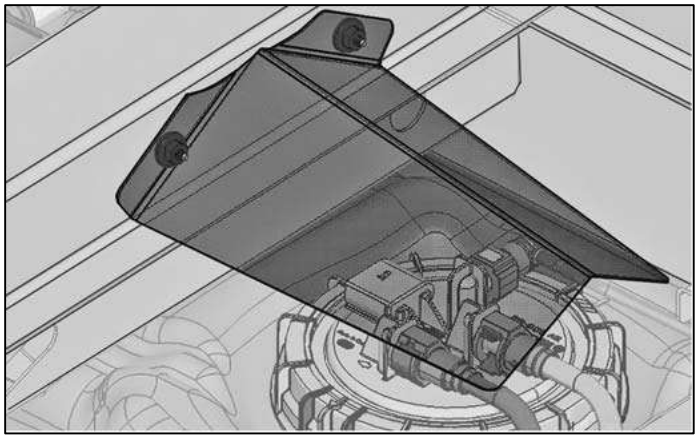

Tank sender protection

If a fuel-powered supplementary heater is retrofitted, the following shall be observed:

- Design without sharp edges
- The fuel tank is not allowed to be subjected to loads in crashes; deflector plates shall be fitted if necessary
- Fuel lines shall be safe
- Exhaust gases shall not be led into the interior

When connecting the fuel supply to auxiliary heaters, the type approval shall be followed.
The "Preparation for auxiliary heater" with PR no. 9M8 is available as optional equipment.

Environmental note

Incorrect modifications to the fuel system can be harmful to the environment.

7.3.2 Exhaust system

7.3.2.1 Exhaust system without SCR system

We recommend using genuine Volkswagen parts if making modifications to the exhaust system.
Country-related regulations and guidelines shall be complied with.
The length and installation position of the flexible metal hose between the exhaust manifold and exhaust pipe is not allowed to be modified.
The free cross-section of the exhaust pipe behind the silencer is not allowed to be reduced.
Under extreme loading, temperatures above 80 °C can be reached between the exhaust system (diesel particulate filter, catalytic converter or main silencer) and the floor panel. Therefore shields or insulation shall be fitted underneath the body to reduce heat radiation.

- Pipe bend 90° maximum
- Avoid additional pipe bends
- Bend radii > 1.5 d

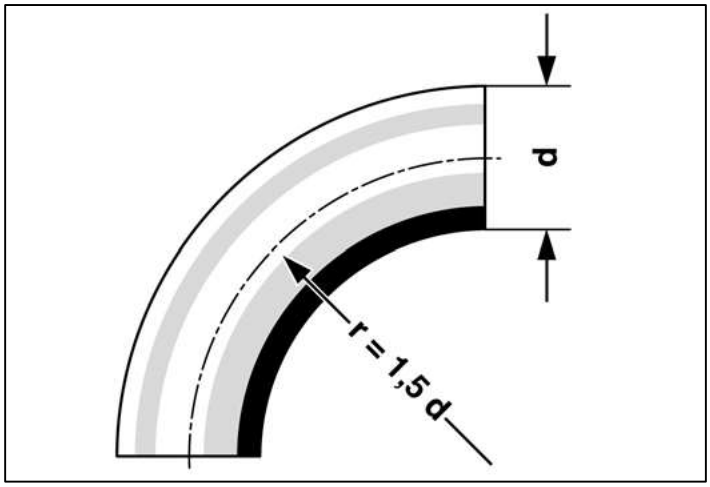

Example of pipe bend design

Minimum distance from plastic pipes, electrical cables and spare wheels:
- 200 mm for exhaust systems without shielding,
- 80 mm with sheet metal shielding,
- 40 mm with sheet metal shielding with additional insulation.

Practical note

After all work on the vehicle, it is necessary to comply with the specified corrosion protection measures (see 5.3 “Corrosion protection measures”).

Additional shielding is required:

- In area of operating units
- In area of assemblies, attachments and installations if they are not made from heat-resistant material.

Warning note

Modifications of the exhaust system up to the main silencer are not permitted.

The lengths and guides, e.g. between diesel particulate filter and main silencer, are optimised in terms of thermal behaviour. Modifications can result in greater to extreme heating of the exhaust system and the surrounding components (drive shafts, tank, floor panel etc.).

Furthermore the following types of exhaust system are available from the factory as optional equipment:

PR number	Description
0P6	Exhaust straight to rear
0P7	Exhaust at side behind rear axle
0P1	Exhaust at side in front of rear axle

You can obtain more information on optional equipment from your Volkswagen customer service, the responsible department (see chapter 2.1 "Body builder guidelines, consulting" or chapter 3.10 "Optional equipment")

7.3.2.2 Exhaust system with SCR system

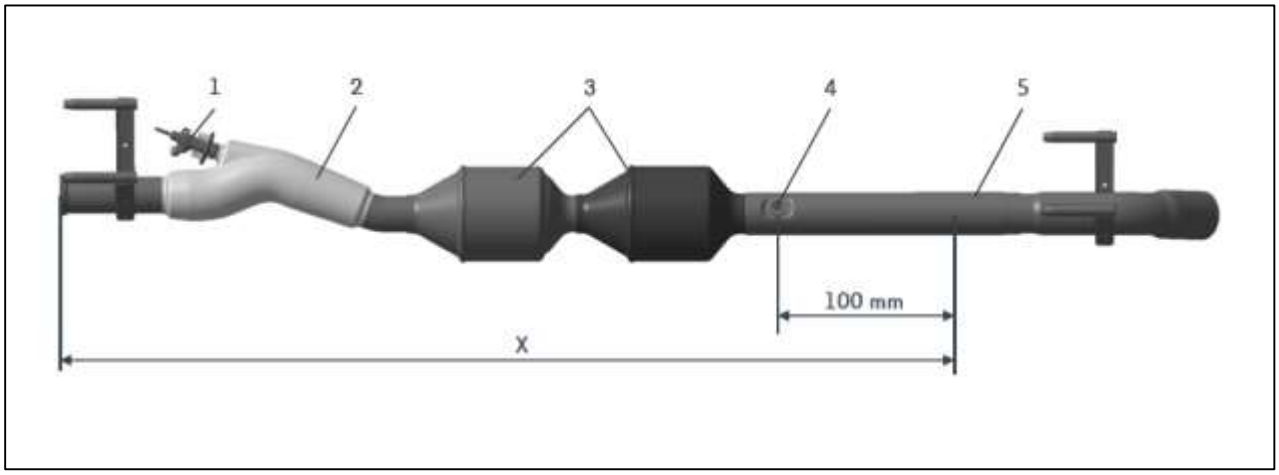

Exhaust system with SCR system

[1] Metering module

[2] Mixer

[3] SCR catalytic converter

[4] NOx sensor

[5] Connecting pipe

X Area in which modifications are not permitted

Modification to the exhaust system with SCR system is not permitted.
Neither the geometry nor the position of the sensors are allowed to be changed.
With regard to modifications outside the area of the SCR system, it is necessary to maintain a distance of min. 100 mm from the NOx sensor (see illustration of exhaust system with SCR system).

Practical note

When working on lines carrying AdBlue®, comply with the workshop manuals from Volkswagen AG. Otherwise, AdBlue® could crystallise and lead to damage to system components.

7.3.3 Engine cooling system

The cooling system, (radiator, radiator grille, air ducts, coolant circuit etc.) is not allowed to be modified as a sufficient flow of cooling air shall be guaranteed.

Keep the cross-sections of the cooling air intakes clear. These are:

- Front grille (related to radiator and condenser) at least 11 dm^2
- Bumper aperture (charge air intake) at least 7 dm^2

Warning signs, badges or other decor parts are not allowed to be fitted in the area in front of the radiator.
Additional cooling systems for assemblies shall be provided when the vehicle is stationary and consumption of high constant power.

7.3.4 Engine air intake

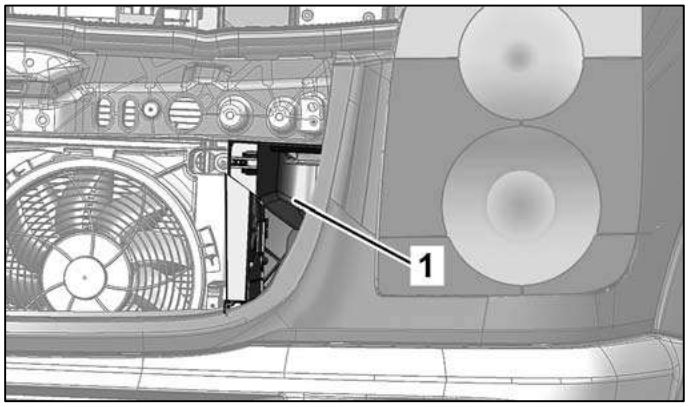

Opening for engine air intake

[1] Area of engine air intake

Practical note

Modifications in the area of the engine air intake (see diagram) are not permitted.

The air filter is fixed in the front module with two rubber-mounted brackets.
If the front module is modified, the securing concept for the air filter is not allowed to be modified.

7.3.4.1 Warm air

The intake of warm air leads to a loss in engine power.
A baffle plate is therefore absolutely necessary between the engine bay and intake point.
The intake temperature should not exceeded the outside temperature by more than 10 °C.

7.3.4.2 Water

Water draining off the body, spray water or water from car washes shall not flow directly past the intake point.
Ensure that water cannot reach the intake point through any fresh air supply openings.
The flow speed at the intake point is not allowed to be increased by modification of the intake opening.

7.3.4.3 Dust/dirt

Increased intake of dust leads to shorter service intervals for the air filter.

7.3.5 Space for ancillaries

Sufficient space shall be provided in order to guarantee the function and operating safety of the components (in particular from electrical wiring, brake lines and fuel lines).
Observe the measurements in the offer drawings.
The distance between the cab and body shall be at least 50 mm (see 4.3.5 “Attachment to the frame”).

7.3.6 Drive shafts

The right configuration of the drive shaft prevents formation of noise and vibrations. We recommend using genuine Volkswagen parts.

Practical note

If the wheelbase of the vehicle is modified, the length of the drive shaft shall be adapted to the vehicle. Modifications shall be performed by a company qualified in drive shaft manufacture.

The drive shaft intermediate bearings shall be made correspondingly stiff. In addition, they shall be configured so that no vibrations are transferred to the vehicle structure.

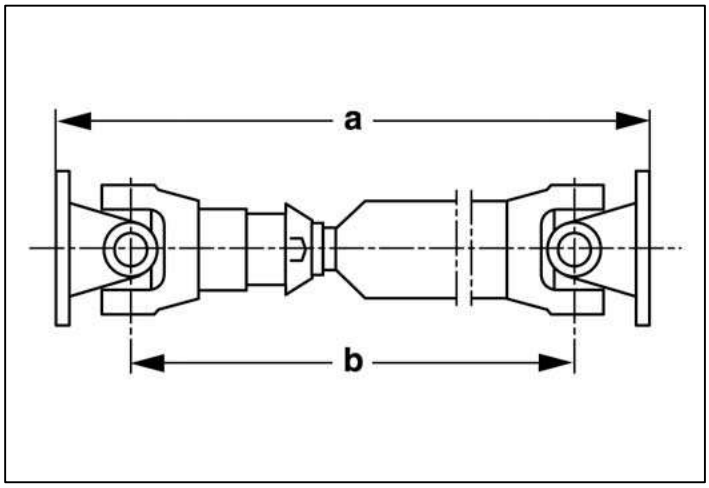

Drive shaft

a Operating length

b Permitted shaft length

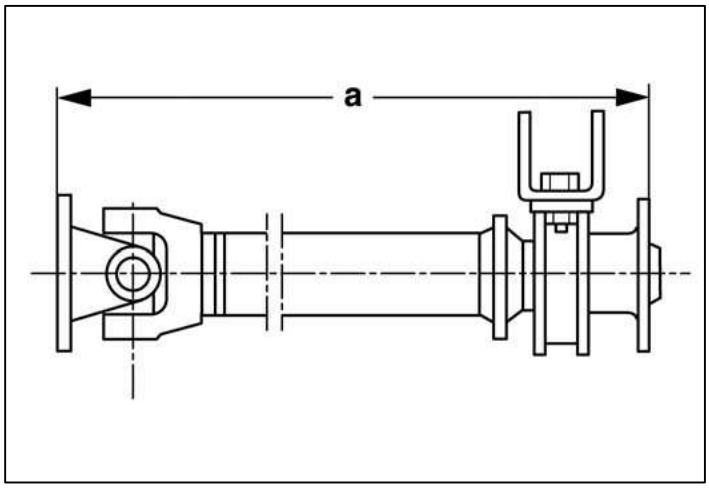

Intermediate shaft

a Operating length

If the wheelbase is changed, the drive shaft arrangement and drive shaft length shall be configured as on a comparable standard vehicle (same type and same or similar wheelbase).
The diameter and wall thickness of the drive shaft tube shall correspond with the standard drive shaft.
The retaining straps fitted on the substructure serve as passive safety and protect the fuel tank in crashes. Modifications to the retaining straps are not permitted.

7.3.6.1 Flexure angles

If necessary, use several drive shafts with centre bearings.
The flexure angles must be the same at both joints (ß1 = ß2). The flexure angles are not allowed to be greater than 6° and not less than 1°.

Practical note

Flexure angles more than 6° as well as flange angle errors (ß1≠ ß2) will lead to vibrations in the powertrain. They affect the life of the drive units and can cause damage.

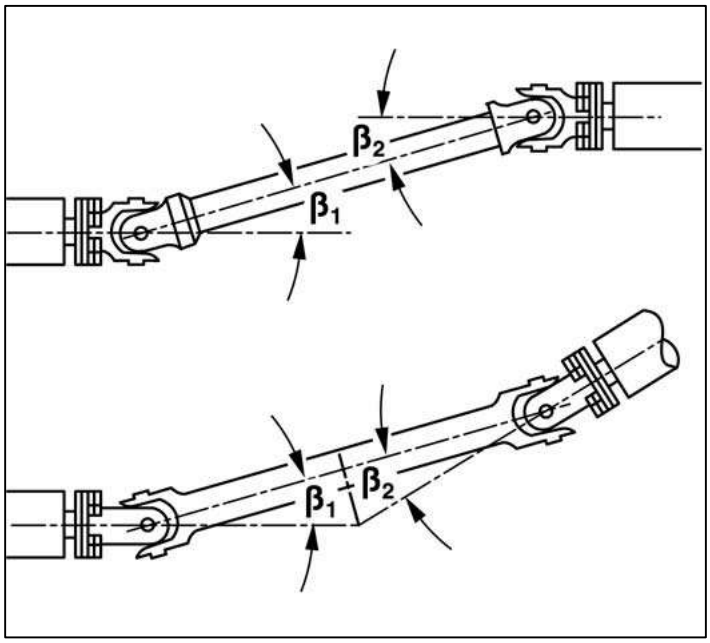

Types of flexure

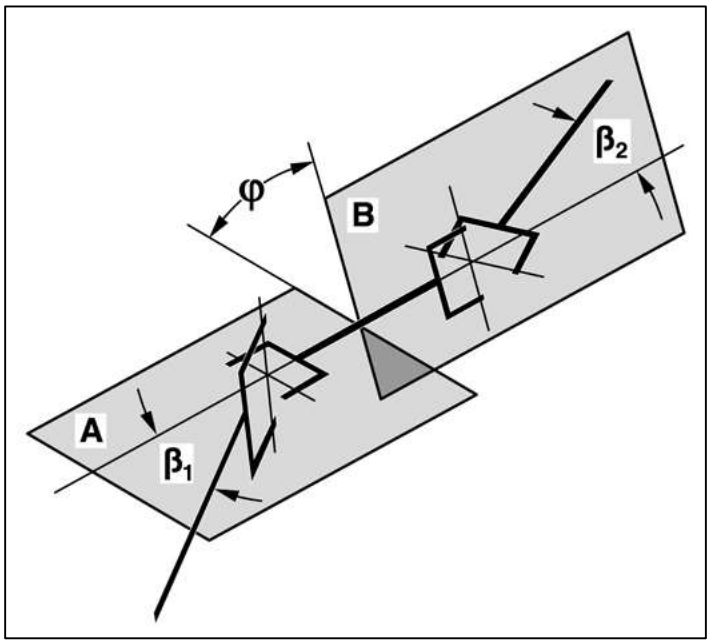

ß1 = ß2

Flexure on one plane (planar flexure):
W or Z-flexure

Flexure on two planes (spatial flexure):
In spatial flexure, the drive and output shaft cross each other offset spatially (combined W and Z-flexure).

The inner joint forks shall be offset to compensate irregularities.
Balance drive shafts before installation.
Modifications outside the limit values are not permitted.
At its own discretion, Volkswagen AG can issue a safety certificate for possible exceptions.
Drawings of the intended drive shaft modification with exact measurements (shaft length and flexure angle) shall then be handed in.

7.3.7 Retarder

The optional equipment "Preparation for retrofitting a retarder" (PR no. 1H5) is available from the factory. This optional equipment includes:

- the adapted cross member structure in substructure
- the wiring to underside of vehicle
- the wiring of a service switch, a warning lamp and a lever in the cockpit.

The service switch and the lever are read by the parametrisable special module (PSM). The PSM forwards the signals up to the disconnection point under the vehicle to make communication with the retarder control unit possible.
The warning lamp is activated directly by the retarder.
A connection terminal 30 is provided on the substructure to supply the retarder with power.
The remaining wiring under the vehicle and from the control unit to the retarder as well as the positioning of the components are tasks for the body builder.
For the electrical connection, see 6.14 "Preparation for retarder".

Practical note

If vehicles (wheelbase 3665 mm) are equipped with a retarder, the handbrake transfer unit shall be moved for reasons of space.

7.3.8 Engine speed regulation

To drive ancillaries (e.g. pumps, compressors etc.), it shall be possible to run the engine at a specific speed.
The optional equipment "Constant speed maintenance" PR no. US1 and US2 (variable) is available for some engine combinations. The speed can be set steplessly and independently of the load throughout the engine speed range. The set speed can be increased by pressing the accelerator pedal.
The "constant speed maintenance" is not suitable for alternator operation if a constant frequency like in the 220 V mains is required.

Practical note

Retrofit solutions for engine speed regulation (other than those available as optional equipment PR no. US1), are only possible with the optional equipment "parameterisable special module" (PSM). This optional equipment enables an externally controlled working speed regulation (see chapter 6.10 "Parametrisable special module (PSM)"). Otherwise failure and engine emergency operation could result.

7.4 Interior

7.4.1 General notes

The driver and front passenger airbag units, the window and thorax bags and belt tensioners are pyrotechnical objects.
Their handling, transport and storage are subject to legislation on potentially explosive substances, and the responsible public authority or government agency shall therefore be notified.
Purchase, transport, storage, installation and removal as well as disposal are only allowed to be performed by trained personnel in accordance with the corresponding safety regulations.
Modifications in the cockpit area and above the shoulder line shall be conducted in accordance with the criteria of the head impact tests acc. to ECE Regulation ECE-R 14 or FMVSS 201.
This applies in particular to the deployment areas of airbags (wood décor, additional installations, mobile phone holders, bottle holders etc.). See also the diagram of the deployment zones of the airbags (see chapter 7.4.2.3 "Driver airbag deployment area").
Painting or surface treatment of the dash panel, steering wheel impact absorber and the tear seams of the airbags is not permitted.

Warning note

Painting or surface treatment of the instrument panel, steering wheel impact absorber and the tear seams of the airbags is not permitted. Otherwise chemical reactions can occur on the treated surfaces. This can weaken or damage the materials so that the restraint systems will no longer function correctly.

The permitted centre of gravity position and axle loads are not allowed to be exceeded.
You will find information of mobile home conversions in 8.13 "Campers".
It is possible to request appropriate information material for converting vehicles in the Federal Republic of Germany, from the responsible road traffic test centre (e.g. TÜV, DEKRA).
The interior fitting-out shall be configured with soft edges and surfaces.
Installations shall be manufactured from flame-retardant materials, and be firmly installed.
Unhindered access to the seats shall be guaranteed. No projecting parts, corners or edges that could cause injuries are allowed to be located in the area of the seats.

Practical note

Add-ons that are permanently fixed to the structure at the front, side and rear of the vehicle which are at the height of possible accident areas, can change the properties of passive safety.

Warning note

Modifications to the airbag system and the belt tensioner system are not permitted.
Modifications or incorrectly performed work on a restraint system (seat belt and seat belt anchors, belt tensioners or airbags) or its wiring could lead to the restraint system no longer working correctly, i.e. airbags or belt tensioners could fail in accidents or be deployed unintentionally.

Warning note

In case of interventions by the body builder in the structure of the vehicle, such as

- modifications to the seats and consequently altered kinematics of the occupants in case of a crash
- modifications to the front body
- installations of parts in the vicinity of the exit openings and the deployment range of the airbags
- installation of third-party seats, modifications to the A and B-pillars as well as to the roof frame and their trim
- modifications to the doors

the safe function of the front airbag, window bag, thorax bag and belt tensioners is no longer guaranteed. Otherwise personal injuries could result.

7.4.2 Safety equipment

7.4.2.1 Airbag control unit and sensors

The airbag control unit in the vehicle and the satellite sensors in vehicles with window and thorax bags are not allowed to be modified in terms of fitting location, fitting location and securing method are not allowed to be revised when compared with series. Other vehicle components are not allowed to be fastened to the airbag control unit, the satellite sensors or the mounting points.

Warning note

Vehicle components that generate vibrations shall not be attached in the vicinity of the airbag control unit or the sensor mounting positions. Modifications to the floor structure in the area of the airbag control unit or the satellite sensors are also not allowed. Otherwise the safe function of the front airbag, window bag, thorax bag and belt tensioners is no longer guaranteed and personal injury could result.

The position of the airbag control is on the centre tunnel underneath the centre console.

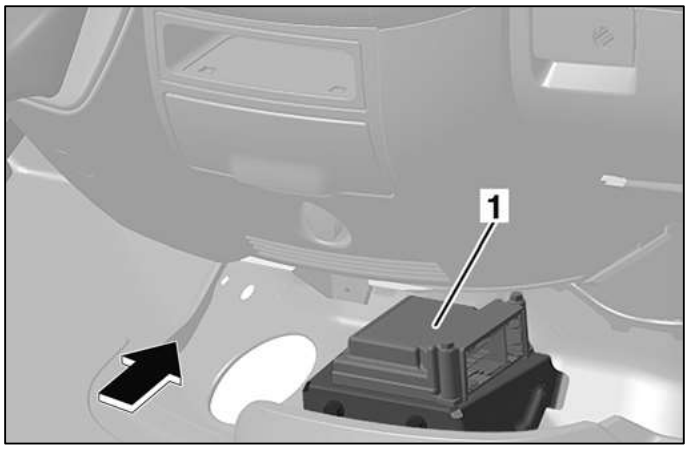

Position of airbag control unit

[1] Airbag control unit

Arrow direction of travel

The satellite sensors are located in the driver and front passenger access boxes in the lower part of the B-pillar behind the sill trim. If window and/or thorax bags are equipped, the additional pressure sensors are fitted in the doors.

Warning note

For safety reasons, airbag sensors, ESC yaw rate sensors or airbag control units that have fallen onto the ground are no longer allowed to be fitted. In this case, a genuine part shall be sourced from Volkswagen. Otherwise the safe function of these systems is no longer guaranteed and personal injury could result.

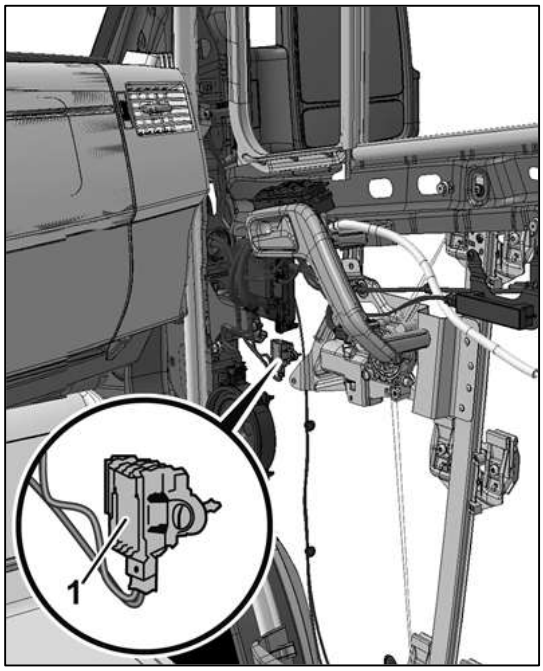

Front pressure sensor

[1] Pressure sensor (trigger sensor for occupant protection systems)

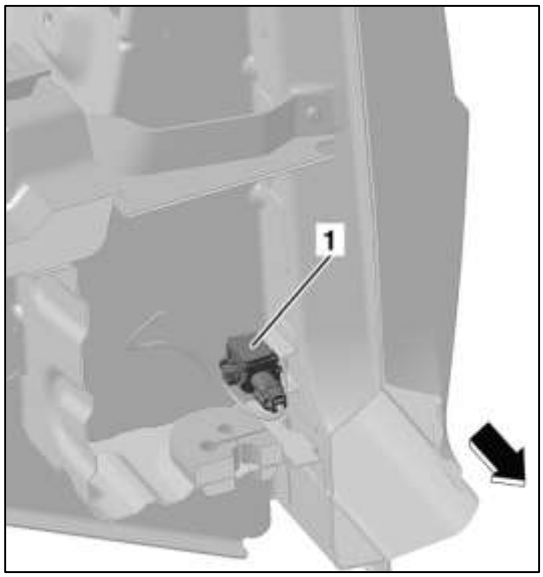

Cross-section of left access box on B-pillar

[1] Satellite sensor (trigger sensor for occupant protection systems)

Arrow direction of travel

7.4.2.2 Seat belts and belt tensioners

Warning note

During work on the vehicle, safety-related parts like, for example, seat belts and seat anchors or belt tensioners shall not be damaged or soiled. Otherwise these systems can no longer function correctly and not provide sufficient safety in an accident.

Practical note

Only the original seat belts are allowed to be installed otherwise the general certificate of roadworthiness of the vehicle will become void.

Vehicles with a maximum design speed exceeding 25 km/h must be equipped with seat belts (see minimum requirements for seat belts ECE-R 16).
The seat belt anchorages must be tested according to ECE regulation ECE-R 14.
All vehicles are equipped with pyrotechnical belt tensioners in the automatic belt retractor in the area of the front seats. The automatic belt retractors are located in the B-pillar. Another automatic belt retractor is located in the back rest of the seat bench for the two-seater front passenger seat.

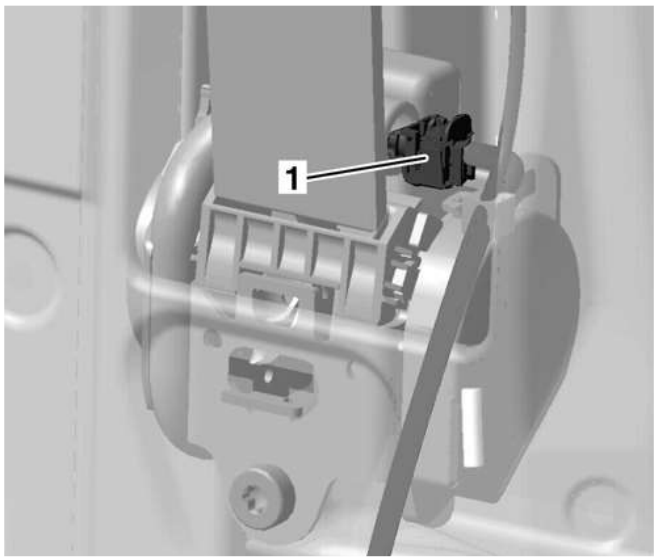

Automatic belt retractor with pyrotechnical belt tensioner

[1] Connector

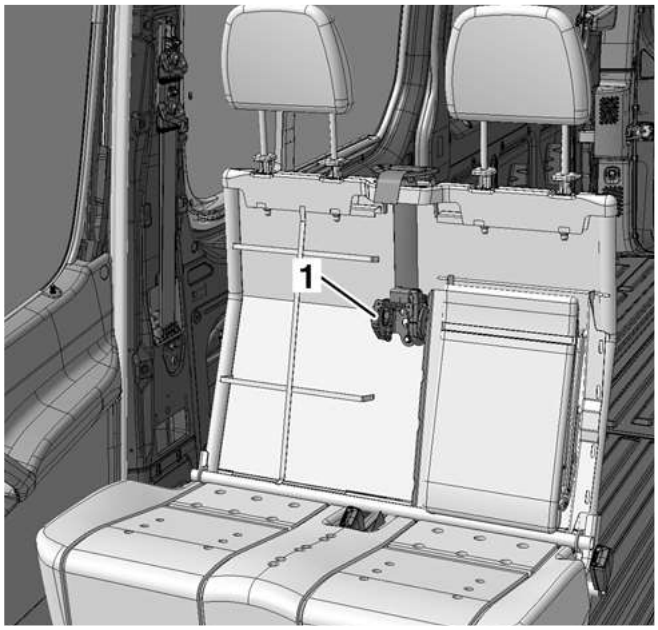

Front passenger seat bench with automatic belt retractors

[1] Retractor

Practical note

The legal requirements listed in this chapter refer to Germany. Please observe the applicable regulations in all other countries.

In addition there is a mounting point for a seat belt fitting at the bottom of the B-pillar that has been tested with a folding seat secured to the body-in-white in accordance with ECE R14, R16 and ECE R17.

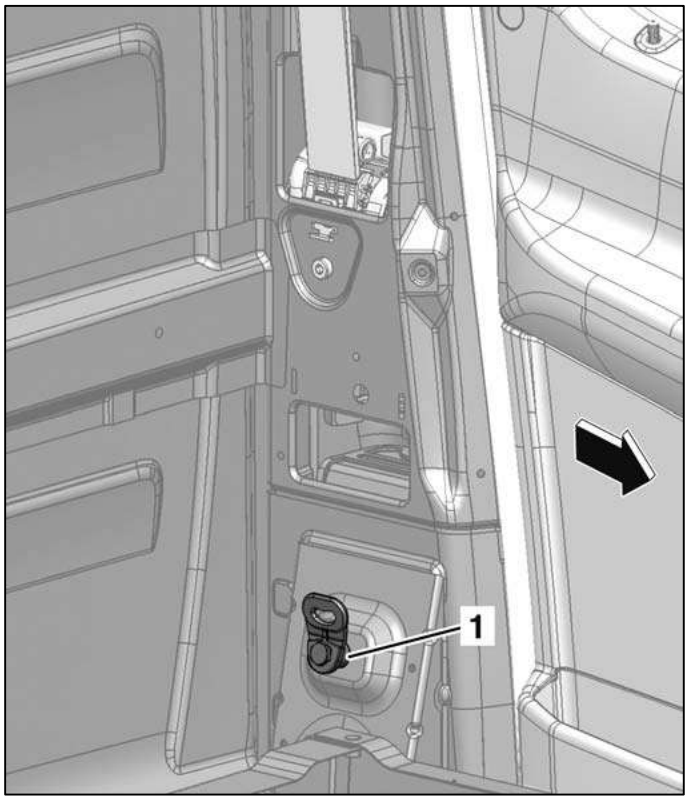

Mounting point for belt end anchor in B-pillar

[1] Belt end anchor

Arrow direction of travel

7.4.2.3 Frontal airbag

All airbag units are labelled “Airbag”:

- The driver airbag unit can be recognised by the “Airbag” label on the steering wheel padding.
- Vehicle equipment with a front passenger airbag unit can also be recognised by the “Airbag” label.
- Vehicle equipment with a window bag is indicated by the label “Airbag” on the window bag cover.
- Vehicle equipment with a thorax bag is indicated by the “SRS airbag” on the backrest.

The warning lamp with the airbag symbol in the instrument cluster is a further recognition feature.

The following illustrations show the position and the deployment area of the driver and front passenger airbag as well as the window and thorax bags. The deployment areas are shown larger than the airbag volume since space for vibrations are required during deployment of the airbag.

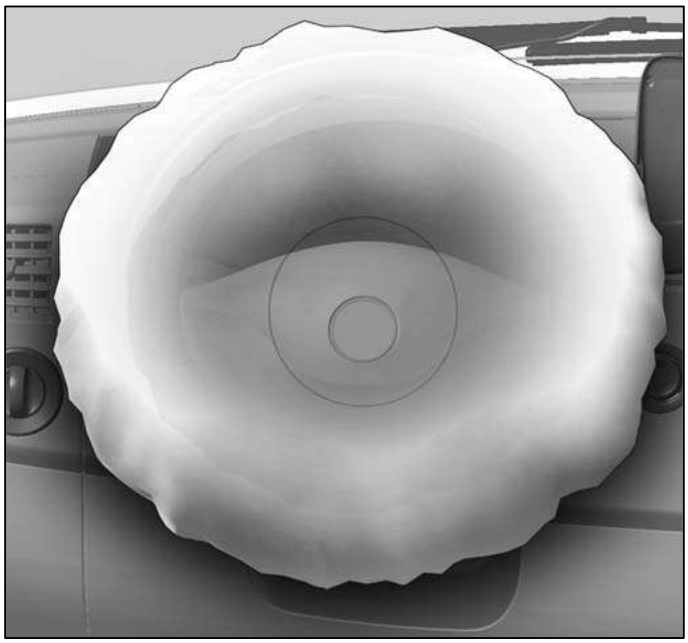

Driver airbag deployment area

Front passenger airbag deployment area

7.4.2.4 Side airbags

Modifications to the B-pillar, door bodies, trim and seat covers are not permitted.

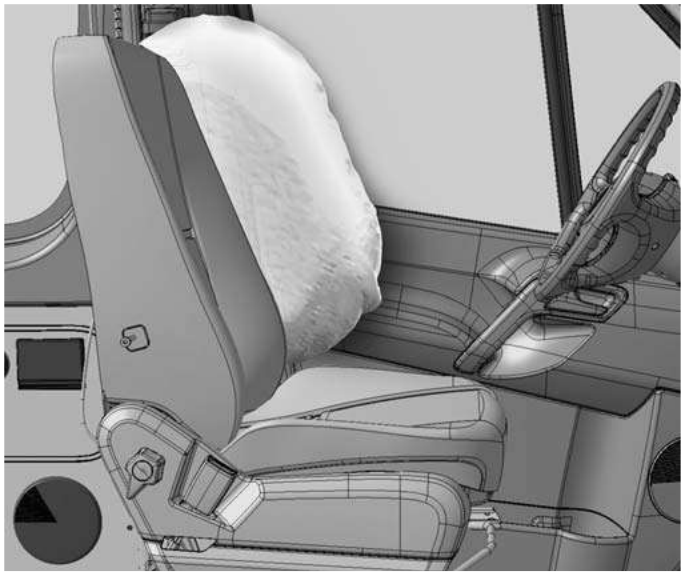

Deployment area of thorax bag on left of vehicle

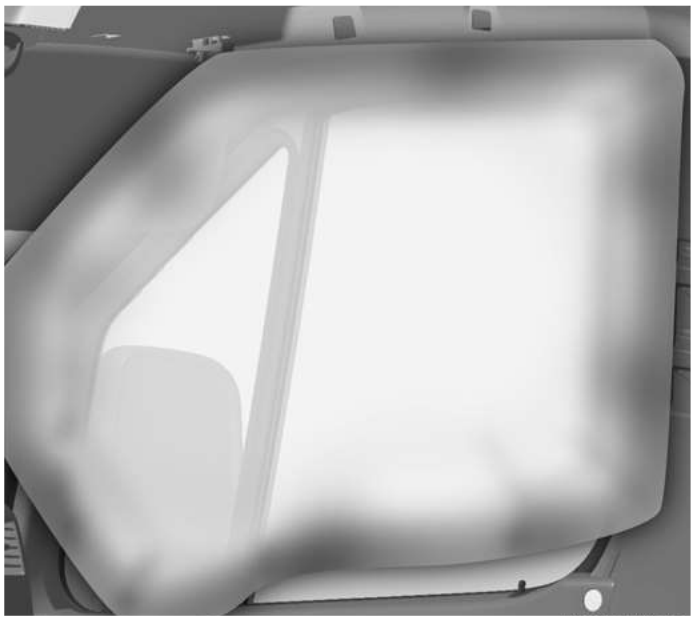

Deployment area of window bag on right of vehicle

Warning note

Work on the A-pillar can cause damage to the window bag. This can lead to the window bag no longer functioning correctly and not providing sufficient safety in an accident.

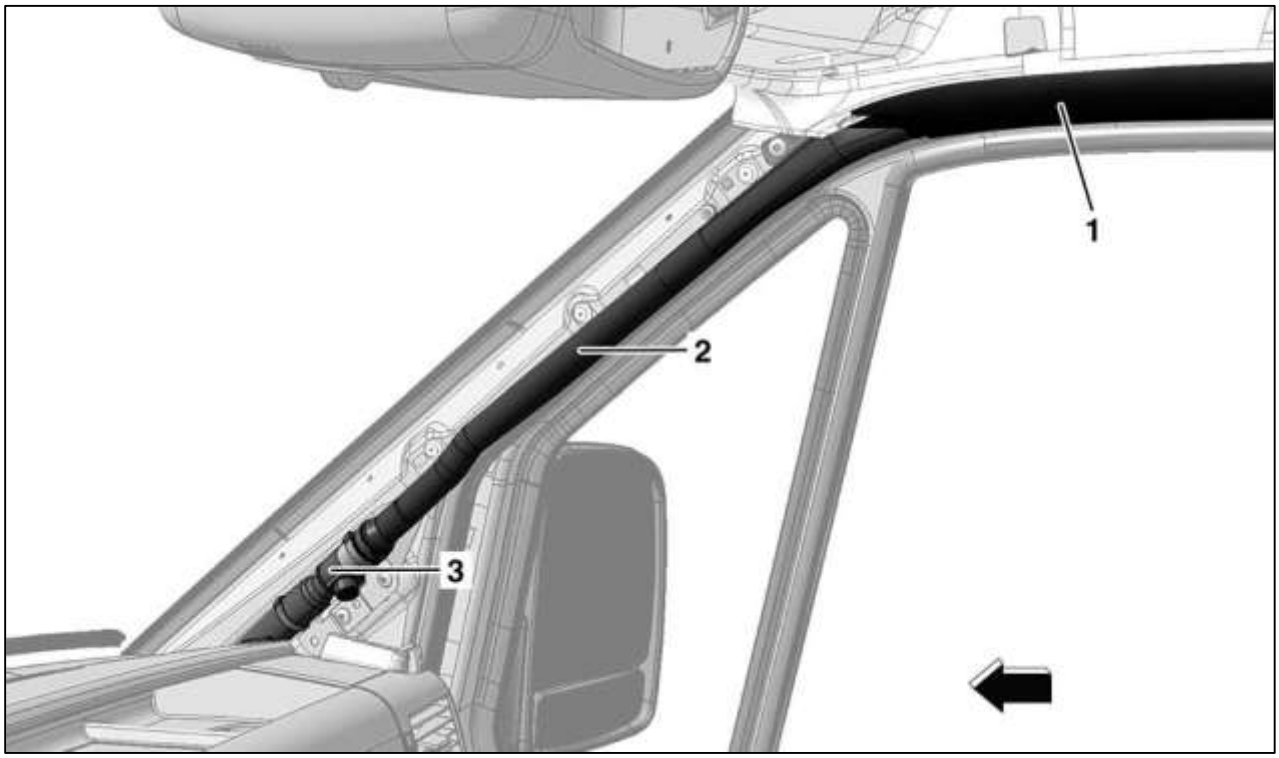

Installation position of window bag

[1] Cover

[2] Window bag in protective sleeve

[3] Gas generator in window bag

Arrow direction of travel

7.4.2.5 Working with airbag and belt tensioner units

Warning note

Removed airbag units shall always be stored with the padded side facing up. If the padded side is pointing downwards, the airbag unit will be catapulted through the air if it is ignited accidentally.

The airbag units fitted in the Crafter include driver, front passenger airbag, window bag and thorax bag.

- Work on removed airbag and belt tensioner units and also testing and assembly work are only allowed to be performed by specialist personnel.
- The assembly of the airbag and belt tensioner units as well as the airbag control unit is only allowed to be performed immediately after removal from the storage room and without delay if the battery has been disconnected, the negative terminal has been covered and the test connection/connector has been disconnected.
- If the work is interrupted, the airbag or belt tensioner units shall be stored again under lock and key.
- The airbag and belt tensioner units are not allowed to be treated with grease, cleaning agents or similar.
- The airbag and belt tensioner units are also not allowed to be exposed to temperatures above 100 °C even briefly.

Airbag and belt tensioner units shall be renewed if they have been dropped from a height greater than 0.5 m. The airbag and belt tensioner units are only allowed to be electrically tested in installed state with the specified testers. For reasons of safety, the test should only be performed at a Volkswagen customer service department or at a workshop that has been specially trained to service these safety systems.
Before disassembling airbag and belt tensioner units, the battery must be disconnected, the negative battery terminal covered and the test connection/electrical connector disconnected.

7.4.2.6 Transport and storage of airbag and belt tensioner units

Within the company, the units shall always be transported in the luggage compartment or load compartment of the vehicle using the spare part packaging.

Practical note

It is not permitted to transport airbag units of any kind in the passenger compartment.

The airbag units fitted in the Crafter include driver, front passenger airbag, window bag and thorax bag.
The storage of airbag and belt tensioner units shall comply with the second provision of the explosive material regulations from 17/04/86.
In accordance with this provision, small quantities of substances and objects can be stored in lockable rooms without special storage authorisation in accordance with the explosive material regulations.
Pyrotechnical objects of class T1 are allowed to be stored in a commercially used building only in limited numbers.
According to Appendix 6 of the Annex to the German 2nd explosives directive, the maximum storage quantities listed below are permitted in a commercially used building without special permission from the responsible authorities while observing certain requirements (e.g. steel cabinet):

- General storage room: 20 kg gross
- The gross mass of the component for which the explosive law authorisation was issued shall be used to calculate the mass actually stored.

The weights of the individual components are as follows:

Driver airbag	1.5 kg
Front passenger airbag	3.3 kg
Window bag	2.1 kg
Thorax bag	0.7 kg
Seat belt	1.3 kg

7.4.2.7 Disposal of airbag and belt tensioner units

The airbag units fitted in the Crafter include driver, front passenger airbag, window bag and thorax bag.
In Germany, accident prevention regulations require that the airbag and belt tensioner units are made unusable by means of electrical ignition before disposal.

- If an unignited belt tensioner needs to be ignited in a vehicle that is being sent for scrapping, place the belt tensioner in the footwell and connect the 2-pin connector directly.
- If the padded covers of the airbag units are not destroyed, the airbag units shall be ignited via the 2-pin connector by trained personnel.

These safety measures are necessary because the pyrotechnical objects can cause injuries if incorrectly activated.

Warning note

Airbag and belt tensioner units shall be disposed of by qualified personnel. The prevention of accident regulations shall be observed.

There is a danger, for example, when cutting torches are used for disposal, during smelting or if parts that are still charged are exposed to fire or smouldering fires.
To avoid additional work for these safety measures, we recommend hiring a disposal company who take the necessary safety precautions (e.g. 10 m safety distance and special ignition device) to dispose of the pyrotechnical parts.
Upon hand-over, the disposal company shall sign a declaration in which they oblige themselves to dispose of pyrotechnical parts in accordance with accident prevention regulations. In agreements of this kind, it shall be ensured that it is not possible for pyrotechnical parts to be sorted out after disposal and to be passed on for repair.

7.4.3 Seats

A safety certificate is required if seats other than those available ex-works are to be retrofitted.
The strength data for seats available ex-works is only valid in conjunction with the original attachment elements. Any deviation from this shall be approved by the responsible department.
Rear seat system with 2 or 3-point seat belts that differ from the standard seats, mustfulfil the requirements of ECE R14. Seat systems without belts are not permitted.
The test certificate ECE R14 (tensile testing including floor panel) shall be presented for approval by Volkswagen AG. Test certificates for seat systems on a rigid panel are not accepted.
When the seat belts and seats (including seat box) are re-fitted, the prescribed bolts shall be used and tightened to the prescribed torque.
Standard seats (e.g. front passenger seat) cannot be retrofitted in the body-in-white since there are no reinforcements or suitable connection points.

Information

You will find information on retrofitting seats in 8.3.1 “Retrofitting seats”.

Warning note

For safety reasons, Volkswagen AG recommends only using seat covers that have been tested for Volkswagen vehicles and are equipped with an opening for thorax sidebags. Otherwise, a thorax sidebag might not be able to inflate correctly, and would fail to offer the intended protective potential in case of an accident. This could result in personal injuries. Suitable covers are available from your Volkswagen customer service, for example. In this regard, please also comply with the additional information in the owner's manual for your vehicle.

Warning note

The attachment of seats to the wheel housing is not permitted. This also applies to wheel housings that are lowered. Otherwise damage could be caused to the vehicle (e.g. wheel housing and tyres) and accidents could result.

7.4.4 Reducing interior noise

Noise insulating materials can be installed to reduce the noise level in the vehicle interior. This must be manufactured from flame-retardant materials.

7.4.4.1 Floor area

The set-up shown in the diagram is recommended for insulation and noise reduction. Heavy insulating foil can also be used for the wheel housing area.

Practical note

Insulating sheets, e.g. made from bitumen, are only temperature resistant to a limited extent. They shall therefore not be placed in the direct vicinity of the engine and exhaust system.

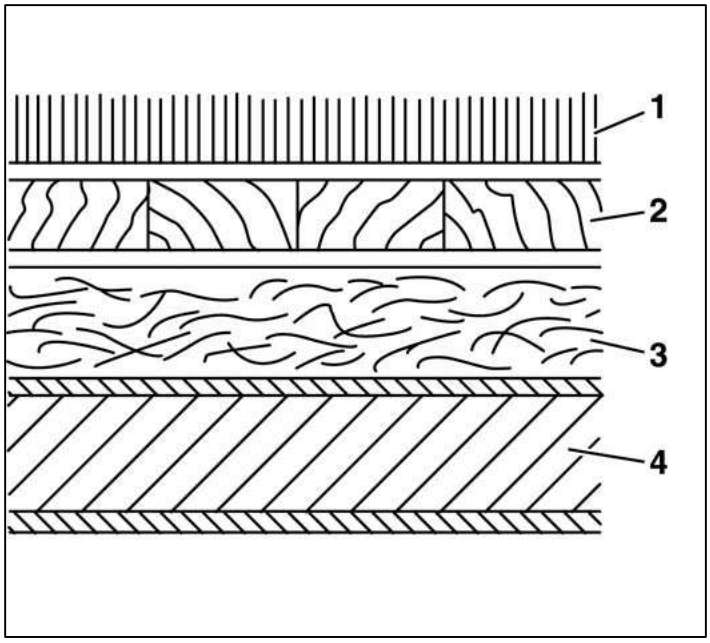

Insulation and acoustic insulation in the floor area

[1] Carpet (rubber underside)

[2] Wooden floor (plywood 12 mm)

[3] Heavy insulating foil (basis weight 8-10 kg/m²)

[4] Supporting structure

7.4.4.2 Roof and sidewalls

In addition to effective insulation, the insulating materials used shall offer the following properties:

- Non-hygroscopic
- Non-water retaining
- Non-water absorbent
- Non-sponging
- Water resistant

Precautions shall be taken to ensure the rapid and unobstructed drainage of collected moisture or condensation, in order to avoid corrosion.
The standard drain holes shall be retained. If required, other drain holes shall be created following consultation with the responsible department.
The inside shall be covered with a sound-permeable material (perforated cardboard, plastic or fabric).

Warning note

Later modifications to the headliner or the roof skin are not permitted if the vehicle is equipped with a window bag between the A-pillar and the B-pillar. Otherwise the window bag might no longer deploy correctly (e.g. delayed or incomplete deployment of the window bag).

7.4.4.3 Seals

Apertures, gaps and slots cut between the engine compartment, vehicle underbody and bulkhead to the vehicle interior shall be sealed carefully with elastic material. Do not install ventilation openings in the immediate vicinity of noise sources.
In addition, the insulation material manufacturers or suppliers should be consulted.
They can make suggestions for optimum noise protection for your particular conversion.

7.4.5 Ventilation

It shall be possible to ventilate the living area and the cockpit sufficiently.
Defrosting of the front and side windows shall remain effective especially if the cockpit is incorporated into the living area or the arrangement and design does not correspond with the standard equipment.
New vehicles can be delivered ex-works with the optional equipment “Regulated air conditioning system/additionally in rear” with PR no. 9AS (see chapter 3.10 “Optional equipment”).
7.5 “Ancillaries” shall be observed for retrofitting mechanical units.

7.5 Ancillaries

If ancillaries are used, the recommended ancillary drives shall be used (see chapter 7.5.3 “Ancillary drives”).

7.5.1 Retrofitting air conditioning system

All installed electrical devices must be checked acc. to the EC regulation ECE-R 10 and shall bear the “e” mark.
For retrofitting air conditioning systems, we recommend the “regulated air conditioning system” PR no. 9AP (“Climatic air conditioning system (semi-automatic)”) or the “rear air conditioning system” with PR no. 9AS (“Climatic air conditioning system (semi-automatic)”) with
second passenger compartment evaporator that can be obtained ex works as optional equipment.
If other air conditioning systems are to be retrofitted, the guidelines from the equipment manufacturer and for the system components should be observed. The body builder is then solely responsible for operating and road safety.

The following points should be observed for the compatibility with the base vehicle:

- Vehicle parts and their function should not be impaired by the installation of an air conditioning system.
- The capacity of the battery and power supplied by the alternator shall be dimensioned sufficiently (see chapter 6.4.7 “Retrofitting alternator”).
- Additional fuse protection of the air-conditioning system circuit (see chapter 6.4.2 “Electrical cables/fuses”).
- The refrigerant compressors shall be mounted on the provided assembly carriers (see chapter 7.5.3.3 “Engine power take-off at front”).
- The additional pulley for the R4 TDI engine is available from VW customer service (VW part no. 03L.100.891.H) for driving a second refrigerant compressor (see chapter 7.5.3.3 “Engine power take-off at front”).
- Ensure that lines are routed correctly (see 5.1 “Brake hoses/cables and lines” as well as 6.4.2 “Electrical cables/fuses”).
- The accessibility of the ancillaries installed and simple maintenance possibilities may not be impaired.
- The Owner's Manual and the maintenance manual for the ancillaries should be handed over when the vehicle is delivered.
- The necessary air supply and the engine cooling shall not be impaired (see 7.3.3 “Engine cooling”).
- When compact systems (evaporator, condenser and fan) are mounted on the cab roof, the permitted roof loads shall not be exceeded (see 7.2.11.6 “Maximum roof loads”).
- Attachments to the roof require a safety certificate from the responsible department.
- If the standard refrigerant system is modified, the fill volumes of refrigerant and refrigerant oil must be redefined and indicated accordingly on a plate in the vehicle.
- For issuance of a clearance certificate, Volkswagen AG must receive documentation of the structural design of the additional auxiliary drives with indication of the position tolerance.
- The specifications for the belt pulleys must match the specifications for the poly V-belt exactly (identical width and number of grooves, e.g. 6PK).
- To ensure the belt is guided properly, “shouldered washers” (with leading edge) must be used.
- The dynamic tensioner with part no. 04L.903.315.C must be used. Manually adjustable belt tensioning elements may not be used.
- It is of great important that the dynamic properties of the belt drive should be investigated in operation, or ideally that a belt dynamics measurement should be performed.

Practical note

Please note that subsequent modifications to the factory-fitted air conditioning system by the body builder are solely the responsibility of the body builder. In such cases, Volkswagen is unable to make any statement about the lubrication of the compressor and the effects on its service life.

As a result, Volkswagen AG does not offer any warranty for the compressor in these cases.

An extensive measuring procedure must be carried out at the compressor manufacturer in order to ensure oil circulation in the refrigerant circuit.

7.5.2 Auxiliary heater

If exhaust gases are guided downwards, the vehicle floor shall be gas tight. Floor opening for control shall be sealed with rubber grommets.
Please note that additional heat exchangers of heating systems such as convection heaters require a water auxiliary heater.

The following auxiliary heaters are available ex-works as optional equipment:

Description	PR number
PTC (electrical air auxiliary heater)	7E6
Warm air auxiliary heater ("auxiliary heater with timer" / auxiliary heater plus supplementary heater)	7VA/7VG
Auxiliary heater ("auxiliary coolant heater with timer" / programmable auxiliary heater function and remote radio control)	7VE/7VN/7VL
Auxiliary heat exchanger in the luggage compartment / chassis ("2nd heat exchanger" / preparation of the 2nd heat exchanger)	6AC/6AF

7.5.3 Ancillary drives

7.5.3.1 General

Ancillary drive versions available ex-works:

- Gearbox-dependent ancillary drive
- Engine power take-off at front via belt drive

The version of the ancillary drive and the selection of ratio depend on the power and speed of the unit to be driven.
Gearbox-dependent ancillary drives are only allowed to be switched on and off when the vehicle stationary.
Figures for the maximum transferable torques for the individual ancillary drives are guidelines for jolt and vibration-free operation.
The figures assume that gearing with adequate endurance strength is available. Additional inertia forces occurring on the driven assemblies are not taken into consideration.
The ratio shall be selected so that a minimum engine speed of 1200 rpm is obtained.
The power decrease should be in the range of the maximum engine speed.
Exposed drive shafts, fan wheels or pulleys shall be covered.
Belts or chain drives are not allowed to be fitted on the drive shaft or flange of an ancillary drive.

Practical note

In vehicles with a high proportion of engine running times with the vehicle stationary (working mode), the normal maintenance intervals specified by Volkswagen AG for the belt drive (poly V-belt, tensioning pulley, idler roller, etc.) shall be reduced according to the application and customer profile.

Practical note

Information and notes in the owner's manual for the vehicle regarding regeneration of the diesel particulate filter in the exhaust system must be complied with when the ancillary drive is used.

7.5.3.2 Gearbox-dependent ancillary drive

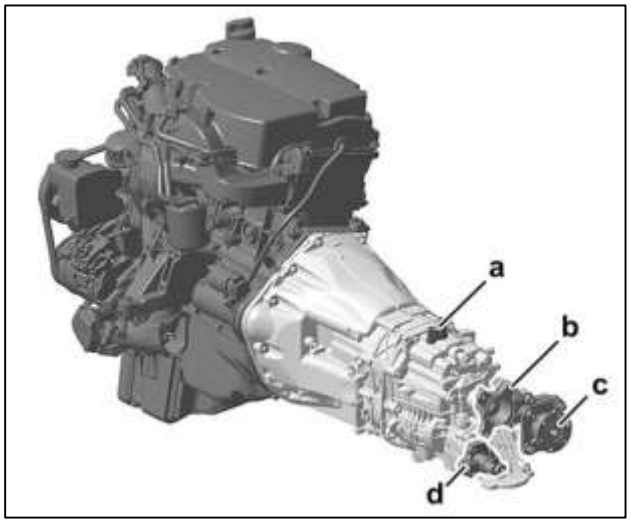

Overview of gearbox-dependent ancillary drive

a Neutral gate switch

b Gearbox shaft flange

c Ancillary drive flange

d Switch cylinder for ancillary drive (activated via switches in dash panel)

The side ancillary drive available for the Volkswagen manual gearbox can be obtained ex-works as optional equipment.

PR no. 0R1	Gearbox with ancillary drive (AD), layshaft without flange
PR no. 0R3	Gearbox with ancillary drive (AD), layshaft with flange
PR no. 0R6	Gearbox with ancillary drive (AD), with gear lock-out and layshaft without flange
PR no. 0R7	Gearbox with ancillary drive (AD), with gear lock-out and layshaft with flange

Practical note

In vehicles with Achleitner 4Motion drive, it is possible to fit ancillary drives without a flange. A test installation with hydraulic pumps from Hydrocar and Bosch Rexroth in the size 230 mm x 100 mm and 152 mm x 126 mm has been performed successfully. Detailed installation documentation is available on request.

Installation of other units shall be checked on a case-by-case basis.

In ancillary drives with a flange, it is not possible to install ancillaries on the Crafter 4Motion Achleitner.

Technical data:

Information

The maximum gravity torque on ancillary drive gearbox flange is 15 Nm with the directly bolted on ancillary drive PR no. 0R1.

n_{NA} = 0,687 x n_{Mot} (NSG370)*
n_{NA} = 0,704 x n_{Mot} (NSG400)*
n_{NA} = 0,756 x n_{Mot} (TSG360/ TSG480)**

Max. full load power NSG370-6*	28 kW at 2780 rpm (engine speed)
Max. full load power NSG400-6*	28 kW at 2,713 rpm (engine speed)
Max. continuous output TSG360/TSG480**	28 kW at 2,526 rpm (engine speed)
Max torque	140 Nm at 1,200 rpm (engine speed)

*for 5-cylinder TDI engines installed up to model year 2011

** for 4-cylinder TDI engines from model year 2012

The direction of rotation is clockwise viewed in the direction of travel.

Practical note

Continuously excessive torque supply shall be avoided. Otherwise the gearbox could be damaged.

NSG370-6* ratio of ancillary drive: 0.687

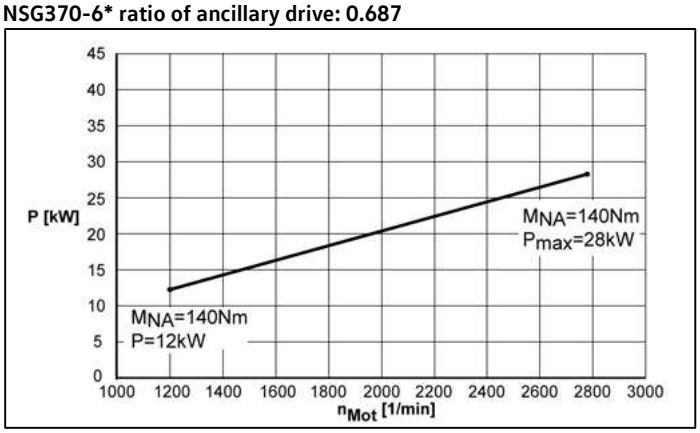

	Min.	Max.
P [kW]	12	28
neng* [rpm]	1200	2780
nAD* [rpm]	824	1909

* for 5-cylinder TDI engines installed up to model year 2011

NSG400-6* ratio of ancillary drive: 0.704

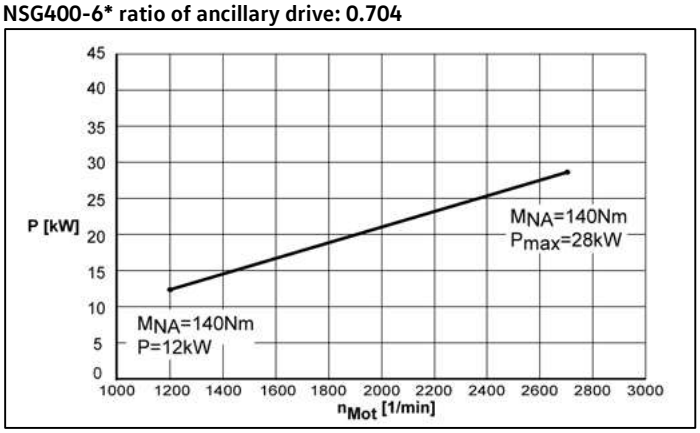

	Min.	Max.
P [kW]	12	28
neng* [rpm]	1200	2713
nAD* [rpm]	844	1909

* for 5-cylinder TDI engines installed up to model year 2011

TSG360/TSG480 ratio of ancillary drive: 0.756**

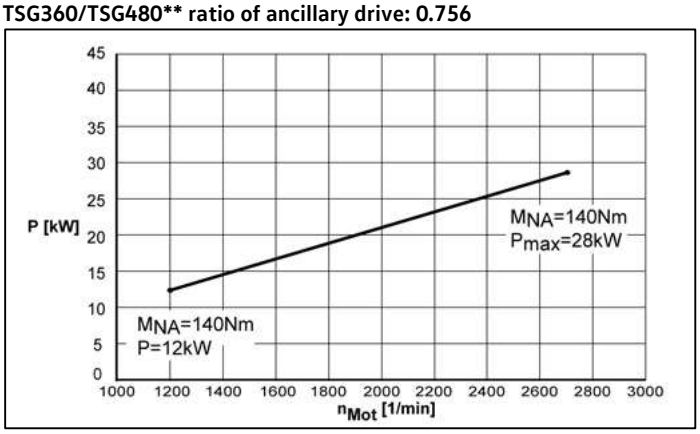

	Min.	Max.
P [kW]	12	28
neng** [rpm]	1200	2713
nAD** [rpm]	908	2051

** for 4-cylinder TDI engines from model year 2012

Dimensions – clutch flange – ancillary drive

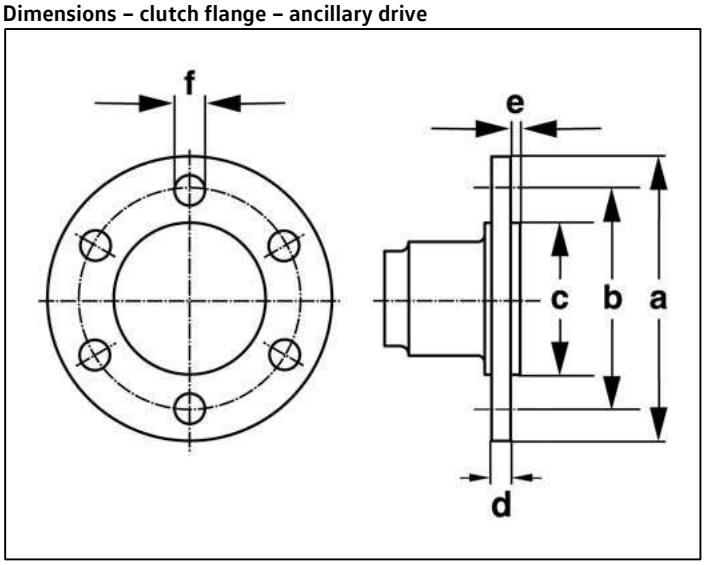

Dimensions of clutch flange

Engine	**4-cylinder TDI Biturbo 120 kW (EA189, PR no. D46)** **4-cylinder TDI Monoturbo 80/100 kW (EA189, PR no. DK2/D94)**
a Ø	90
b Ø	74.5
c Ø	47e8
d	6
e	2.1
f Ø	8A12
Number of holes	6

Power take-off systems

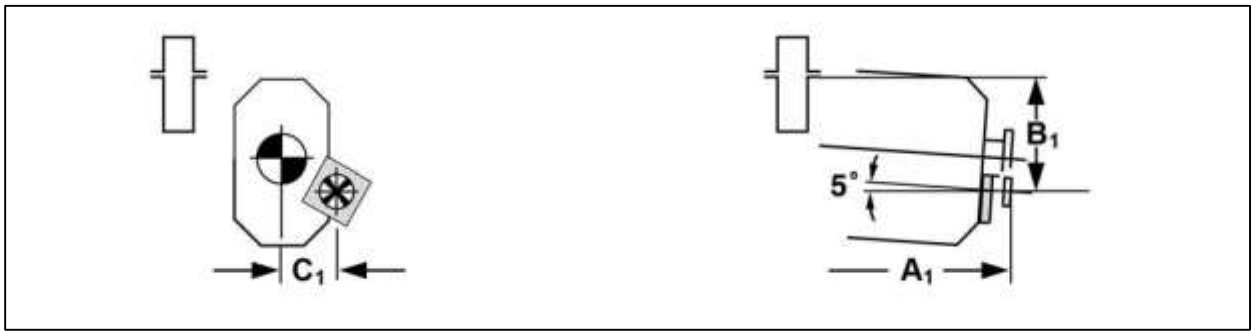

Dimensioning of ancillary drive

	5-cylinder TDI (EA153) *		4-cylinder TDI (EA189)			
I	**5-cylinder TDI 100 kW**		**4-cylinder Monoturbo TDI 80/100 kW**		**4-cylinder Biturbo TDI 105/120 kW**	
II	**NSG370-6**		**TSG360 AD**		**TSG480 AD**	
III	0R3	0R7	0R3	0R1	0R3	0R1
IV	0.687	0.687	0.756	0.756	0.756	0.756
V	28/2500	28/2500	28/2526	28/2526	28/2526	28/2526
VI	140	140	140	140	140	140
VII	b	b	b	b	b	b
A1	639	639	610	563	660	612
B1	131	131	139	136	138	134
C1	125.8	125.8	126	126	126	126

* installed up to model year 2011

Explanations for ancillary drives table:

I Engine

II Gearbox

III Ancillary drive description (optional equipment PR no.)

IV Ratio i_{AD}; input speed at ancillary drive $n_{AD} = i_{AD} \times N_{engine}$

V Constant output at ancillary drive in kW at engine speed rpm

VI Maximum torque available at ancillary drive in Nm

VII The direction of rotation viewed in the direction of travel

a) Anticlockwise

b) Clockwise

A1 Measurement from rear edge of clutch flange to centre of front axle in mm

B1 Measurement from centre of clutch flange to lower edge of frame longitudinal member flange in mm

C1 Measurement from centre of clutch flange to centre of gearbox flange in mm

7.5.3.3 Engine power take-off at front

Ancillaries (e.g. refrigerant compressor or additional alternator) can be driven via an additional pulley on the crankshaft, see also 7.5 "Ancillaries".

The 4-cylinder TDI engine is conceived for retrofit of additional ancillaries as standard (all output versions).

For the retrofit, a conversion kit (pulley, screws, bracket, poly V-belt, tensioning roller) can be obtained from Volkswagen Genuine Parts or EDAG Engineering GmbH:

for power take-off	**Conversion kit (Order no.)**	**Engines* (model no.)**	
Additional alternator for driving (14 V)	2E0.998.997	Mahle alternator (MG 52)	---
Additional alternator for driving (28 V)	2E0.998.997	Mahle alternator (MG 142)	Dynawatt alternator 500 (0312810610)
Additional alternator for stationary operation (230V)	2E0.998.998	Mahle alternator (MG 61)	Dynawatt alternator 5000 (0301015200)
additional alternator for Pulsor refrigeration system from Carrier (400 V)	**	Carrier alternator (Type G4 – 400 V)	
Refrigerant compressor	2E0.898.094	Sanden SD7 H15 (model no. #8228)	
Refrigerant compressor	**	Valeo (TM15/TM16, QP15/QP16)	

* The ancillaries are normally purchased by the body builder directly from the manufacturer and are not part of the conversion kit.

** Conversion kit can be obtained through EDAG Engineering GmbH.

Contact:

1. MAHLE Aftermarket GmbH
   Pragstr. 26 - 46, 70376 Stuttgart, Germany
   Phone: +49 711 501-12229, Fax: +49 711 501-13100
   Online catalogue: www.mahle-aftermarket.com/eu/de/
2. Dynawatt:
   LEAB Automotive GmbH
   Thorshammer 6, D-24866 Busdorf
   Tel.: +49(0)4621/360667
   www.leab.eu
3. Sanden: www.aftermarket-sanden-europe.com
4. Valeo: www.valeocompressors.com/en/contact
5. Carrier: www.carrier.com
6. EDAG:
   EDAG Engineering GmbH
   Braunschweiger Str. 108, D-38518 Gifhorn
   Ansprechpartner: Herr Mario Preugschat
   Email: mario.preugschat@edag.de
   www.edag.de

Please note that the alternators and refrigerant compressors listed above are tested at the factory.

The components to be procured via EDAG Engineering GmbH are recommended by Volkswagen Commercial Vehicles.

Practical note

For retrofitting of auxiliary drives, please only use the assemblies and corresponding conversion kits tested or recommended by Volkswagen AG (see table above!).

For selected assemblies, installation instructions have been saved on the body builder portal of Volkswagen AG (see 2.1.1 “Contact in Germany” or 2.1.2 “International contact”)

If other alternators and refrigerant compressors are fitted, Volkswagen AG is unable to make any statement about the service life of the belt drive. The body builder is then solely responsible for operating and road safety.

Please also comply with the guidelines from the manufacturer of the equipment and system components, as well as the workshop manuals from Volkswagen AG.

Information

Volkswagen AG workshop manuals can be downloaded from the Internet at erWin* (Electronic Repair and Workshop Information of Volkswagen AG):
http://erwin.volkswagen.de/erwin/showHome.do .

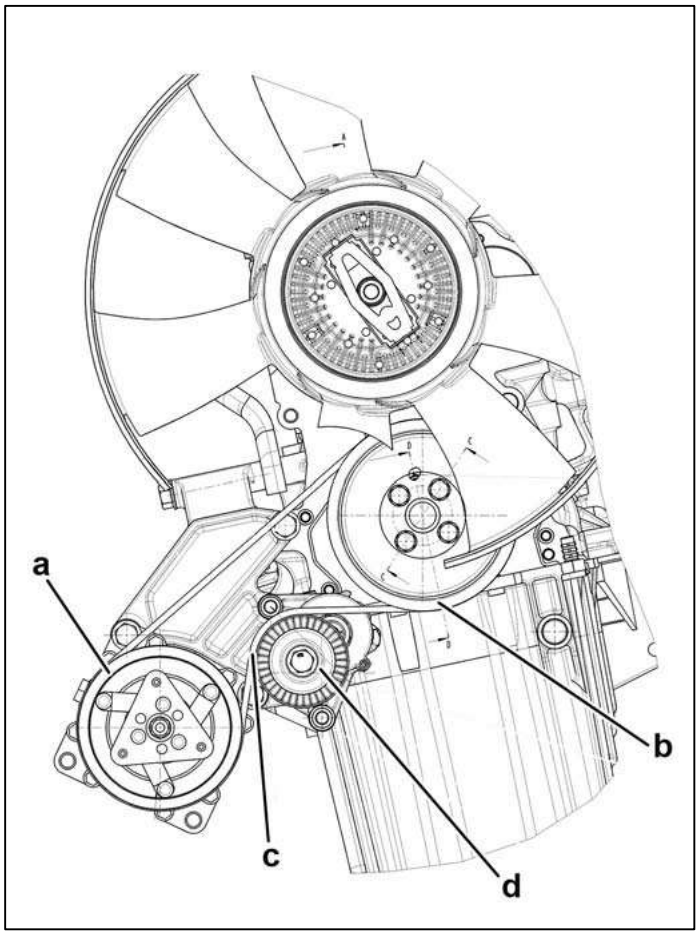

Overview of engine power take-off for refrigerant compressor (4-cylinder TDI engine)

a) Sanden SD7 H15 (model no. #8228) refrigerant compressor

b) Additional pulley

c) Belt

d) Belt tensioner

Maximum power output:

Engines	Refrigerant compressor	Maximum power output
4-cylinder TDI (EA189)	Sanden SD7 H15 (model no. #8228)	Up to 8.0 kW

The accessory pulley is on the 3rd belt level. Belt width 12.7 mm, effective diameter 128.5 mm.

Pulley diameter of ancillaries:

Engines	Refrigerant compressor	Additional pulley
4-cylinder TDI (EA189)	Sanden SD7 H15 (model no. #8228)	Pulley (VW part no. 03L.105.255.A), Diameter: 138.4 mm, 6-groove

We recommend the following Volkswagen genuine parts for the pulleys:

Engines	Refrigerant compressor	Belt
4-cylinder TDI (EA189)	Sanden SD7 H15 (model no. #8228)	Belt 6PK 976 (VW component no. 037.903.137.G)

The length of the belt shall be set by the body builder depending on the mechanical unit position or pulley dimension.
The ancillaries can be mounted on an assembly carrier secured to the engine.
If the axis positions are the same, the same belts can be used.
For all different conversions, we recommend using the carrier hub (VW part no. 03L.105.215) and pulley (03L.105.255.A) on the crankshaft side.

Maximum weight of ancillaries

Engines	PR. no.	Refrigerant compressor	Weight
4-cylinder TDI (EA189)	DK2, D94, D46	Sanden SD7 H15 (model no. S8228)	6.9 kg

The guidelines in 7.5.1 “Retrofitting air conditioning system” shall be observed.

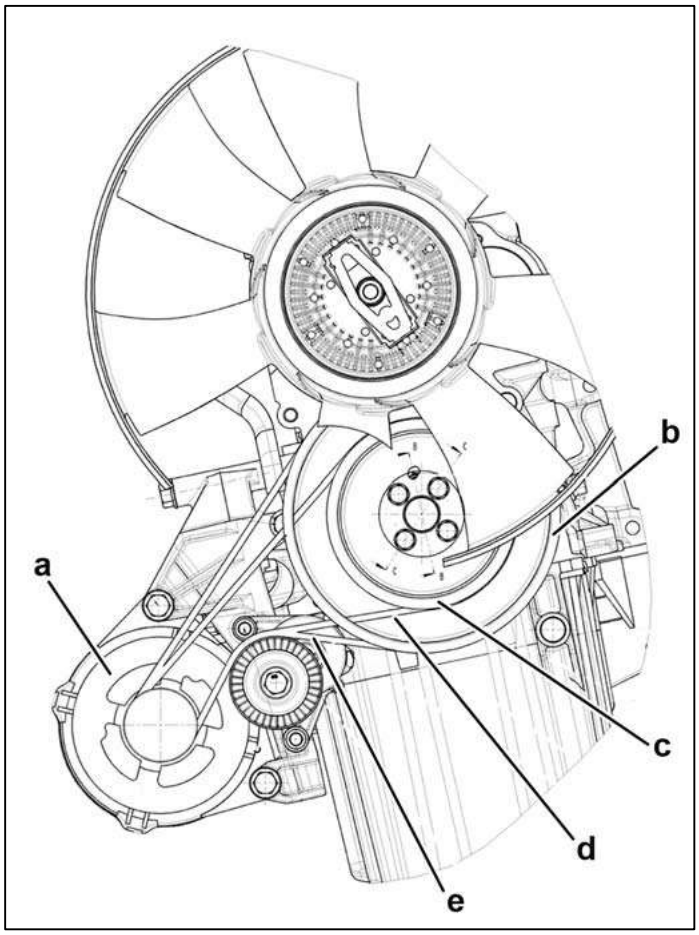

Overview of engine power take-off for additional alternator (4-cylinder TDI engine)

a) Additional alternator, e.g. Dynawatt 5000 (230 V) or Dynawatt 500 (14/28 V)

b) Additional pulley (additional alternator stationary operation)

c) Additional pulley (additional alternator driving operation)

d) Belt 6PK844 (for additional alternator driving operation)

e) Belt 6PK 976 (for additional alternator stationary operation)

Maximum power output:

Engines	Additional alternator	Maximum power output
4-cylinder TDI (EA189)	Dynawatt 5000 (230 V AC) or Dynawatt 500 (14/28 V DC)	8.5 kW

The accessory pulley is on the 3rd belt level. The belt width of the 6PK version is 21.4 mm.

Pulley diameter of ancillaries:

Engines	Additional alternator	Additional pulley
4-cylinder TDI (EA189)	Additional generator for stationary operation (Dynawatt 5000, 230 V AC)	Belt pulley VW part no. 03L.105.255.B, diameter: 204 mm, 6-groove
	Additional generator for driving (Dynawatt 500, 14/28 V DC)	Pulley (VW part no. 03L.105.255.A), Diameter: 138.4 mm, 6-groove

We recommend the following Volkswagen genuine parts for the pulleys:

Engines	Additional alternator	Belt
4-cylinder TDI (EA189)	Additional generator for stationary operation (Dynawatt 5000, 230 V AC)	Belt 6PK 976 (VW component no. 037.903.137.G)
	Additional generator for driving (Dynawatt 500, 14/28 V DC)	Belt 4PK 844 (VW component no. 03L.903.137.P)

The length of the belt shall be set by the body builder depending on the mechanical unit position or pulley dimension.
The ancillaries can be mounted on an assembly carrier secured to the engine.
If the axis positions are the same, the same belts can be used.
For all different conversions, we recommend using the carrier hub (VW part no. 03L.105.215) and pulley (03L.105.255.A) on the crankshaft side.

Maximum weight of ancillaries

Engines	PR. no.	Additional alternator	Weight
4-cylinder TDI (EA189)	DK2, D94, D46	Additional generator for stationary operation (Dynawatt 5000, 230 V AC)	6.8 kg
		Additional generator for driving (Dynawatt 500, 14/28 V DC)	7.3 kg

The guidelines in 7.5.1 “Retrofitting air conditioning system” shall be observed.

Information

In order to operate an ancillary drive via the 3rd belt track, it is necessary to cut open the radiator cowl at the indicated location. For more details about this, refer to the workshop manuals of Volkswagen AG:
http://erwin.volkswagen.de

Furthermore, we recommend installing the “front noise insulation” with component order no. 2E0.805.692.A in order to protect the auxiliary drive.

7.5.3.4 Drive shaft installation

Observe the following when installing drive shafts:

- Installation guidelines of drive shaft manufacturer
- If necessary use several drive shafts with centre bearings
- The connecting surfaces shall be completely flat
- The flexure angles must be the same at both joints (ß1 = ß2). They are not allowed to be larger than 6° and not smaller than 1°
- Balancing plates are not allowed to be removed
- When installing, make sure that the markings on the drives shafts line up

Further information on configuring drive shafts (see chapter 7.3.6 “Drive shafts”).

7.5.4 Retrofitting alternator

The existing ancillary drives shall be used for driving an additional alternator.
You will find more information on additional alternators that can be ordered ex-works in chapter 6.4.7 “Retrofitting alternator”.

7.5.5 Additional brakes / retarder

The optional equipment “Preparation for retarder” (PR no. 1H5) is available for retrofitting a retarder. For explanations of the electrical scope (see 6.14 “Preparation for retarder”).

7.6 Add-ons

A safety certificate from the responsible department is required for add-ons to the frame.
The gross axle weight ratings shall always be observed.
The function of vehicle parts is not allowed to be impaired by add-ons.
Please observe the applicable regulations in your respective country.

7.6.1 Winch behind cab

When a winch is attached behind the cab, it shall be mounted on a suitably dimensioned assembly frame.

Practical note

The attachment of a winch to the front part of the frame is not permitted.

7.6.2 Air baffles

The deflector on the cab roof may only have adhesive across the entire surface (high-strength adhesive) in the area of the lateral roof frame, roof frame front and roof area 1. and the cross strut (high B-pillar).
The force applied by the air resistance or contact force shall be taken into consideration. It shall be attached in a way that does not damage the base vehicle.

Possible interactions with driver assist systems shall be taken into account (see 6.16 “Rain/light sensor”).

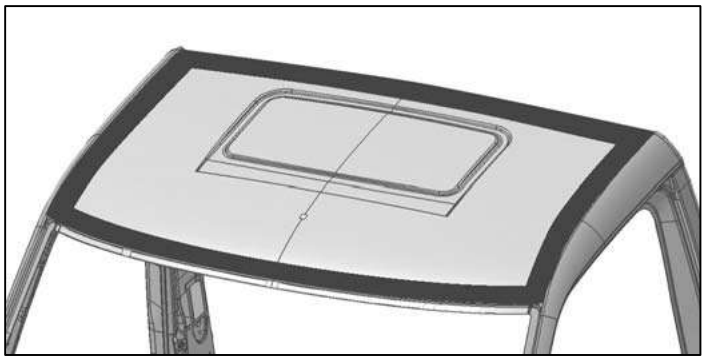

Adhesive area for air baffles

Practical note

Drilling additional holes into the cab roof for attachment is not permitted.

A safety certificate from the responsible department is required for other roof add-ons (e.g. air conditioning system).

7.6.3 Cab superstructures

- The permitted centre of gravity and front axle load shall be observed (see 4.1.2 "Maximum permitted centre of gravity").
- The attachment to the roof shall be configured as described in chapter 7.2.11 "Roof of panel/window van".
- If vibrations or noise occur after the conversion, the assembly frame shall run through the rear wall of the cab to underneath the seat box and secured there. A design suggestion can be obtained from the responsible department (see chapter 2.2 "Body builder guidelines, consulting"). An additional battery like PR no. 8FD (located in the front passenger seat box) is not possible with this design.

Possible interactions with driver assist systems shall be taken into account (see 6.16 "Rain/light sensor").

7.6.4 Roof rack

Crafter panel vans and window vans:

- Ensure even load distribution over whole roof area.
- We recommend using an anti-roll bar on the front axle.
- The supporting brackets shall be placed with equal spacing. 50 kg per pair of feet and cross bar can be taken as a rule of thumb.
- Reduce the load on a percentage basis for shorter roof racks.

Limit values for roof rack (loaded)		
	Max. roof load [kg]	**Minimum number of pairs of support feet**
Low roof	300	6
High roof	150	3
Cab	100	2
Double cab	100	2

The Crafter can be equipped with C-rails (PR no. 3S4) for mounting roof rack systems.

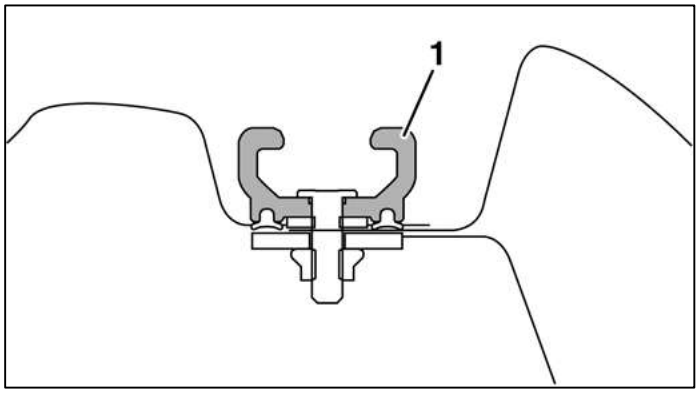

Roof rack system mounting

[1] C-rail (roof rack)

7.6.5 Shelf installation/ installations in interior

7.6.5.1 General

Shelf installations shall:

- be sufficiently stable and self-supporting
- rest on the cross members and longitudinal members of the vehicle floor
- distribute the forces evenly
- be attached to the load rails and load securing points, to the entire contact surface on the body-in-white in the same way as the series production rails or to the preparation for shelf installations (PR no. 6B4)
- Note the installation direction when retrofitting fastening rings. The straight side of the fastening point shall be placed towards the panel wall. Otherwise, the fastening hoop could be bent beyond its incorrect limit point, and damaged, when fastening.

Practical note

Attachments subject to force application only into the vehicle side wall as well as individual force application points into the vehicle wall are not permitted. Otherwise the sidewall might be damaged.

We recommend the load rails that are available as optional equipment (PR no. 6L8 or PR no. 6L9) for the installation and attachment of shelves.

Information

More information on the sidewall
(see chapter 7.2.7 “Sidewall, windows, doors and lids”).

7.6.5.2 Load rails from factory

Load rails at two heights in the vehicle are available from the factory

- PR no. 6L8 - Load rails on roof frame
- PR no. 6L9 - Load rails on bracing belt (below window outline)

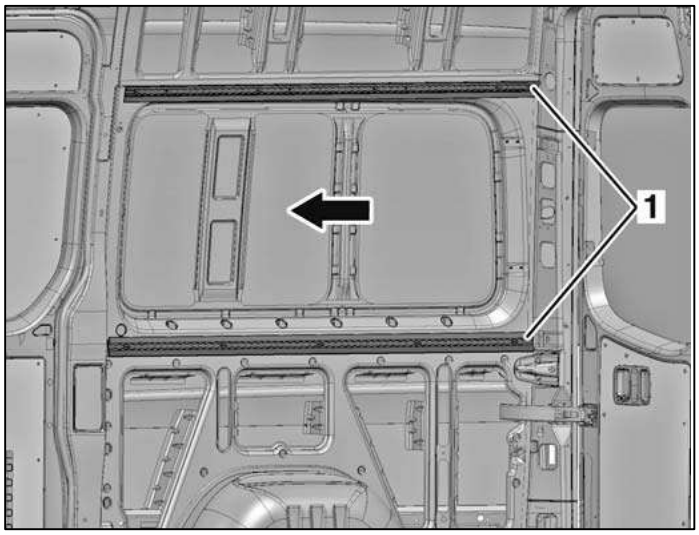

Load rails in panel van

[1] Load rails

Arrow direction of travel

Maximum tensile forces with Volkswagen genuine load rails

	Permitted nominal pulling force [daN]
Upper load rail PR no. 6L8	150
Lower load rail PR no. 6L9	250

The specified values only apply if the following requirements are met:

- The load shall be on the floor
- The load shall be fastened at two securing points on the rail
- The spacing from the next load securing point on the same rail may not exceed1 m

Information

Please observe the operating manual supplied with the factory load rails.

7.6.5.3 Retrofitting load rails/securing rails

Practical note

Load rails and securing rails are only allowed to be retrofitted in the areas of the vehicle side wall that have been configured for this in the same way as the load rails available from the factory.
The maximum tensile forces (see table) shall be observed in all driving conditions. Otherwise the sidewall might be damaged.

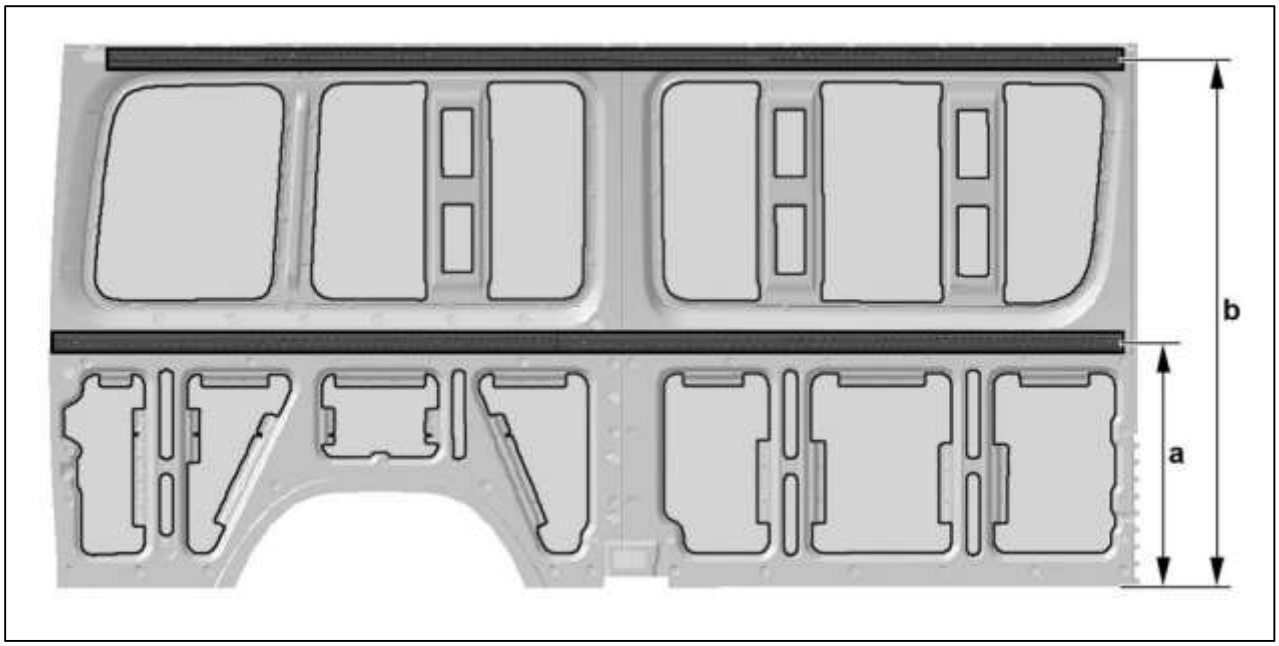

Position for retrofitting load securing rails on vehicle side wall

Centre load rail	Measurement in [mm]	
Related to standard wooden floor	a = 718	b = 1552
Related to vehicle floor (ribbing on top)	a = 729	b = 1563

The following points shall be observed when retrofitting load rails on the vehicle side wall:

- The load rail manufacturer's specifications shall be observed.
- The maximum tensile forces (see table) shall be clearly indicated in the area of the load rails (for example, with stickers) and enclosed with the vehicle owner's manual in a suitable form.

Connecting to vehicle sidewall with rivets and adhesive

	Permitted nominal pulling force [daN]
Upper load rail (in area of roof frame)	120
Lower load rail (in area of bracing belt)	200

Connecting to vehicle sidewall with rivets

	Permitted nominal pulling force [daN]
Upper load rail (in area of roof frame)	60
Lower load rail (in area of bracing belt)	100

The specified values only apply if the following requirements are met:

- The load shall be on the floor
- The load shall be fastened at two securing points on the rail
- The spacing from the next load securing point on the same rail may not exceed1 m

Requirements for rivets

The following values shall be observed when load rails are retrofitted on the vehicle side walls with rivets:

- Head tensile strength at least 3800 N
- Shear strength at least 3300 N
- Rivet diameter = 4.8 mm
- Head diameter = 9.3 mm
- Clamping area = 3.5 mm to 6.0 mm

Recommended process adhesives

Körapur 140	
Use	Adhesive
Supplier	Kömmerling, L no. 110/75074
Part number	A 009 989 17 71
Chemical basis	Moisture curing 1-component PU
Shelf-life	6 months, date on container
Köracur 110	
Use	Hardener
Supplier	Kömmerling, L no. 110/75074
Part number	A 009 989 18 71
Chemical basis	Water gel paste
Shelf-life	9 months, date on container
Körabond HG81	
Use	Activator
Supplier	Kömmerling, L no. 110/75074
Part number	A 001 986 90 71
Chemical basis	Silane synthetic resin
Shelf-life	12 months

Recommended process steps for adhesives

- Rub down load rail
- The bonding surface on the rear of the securing rail shall be rubbed down with a wire brush over the whole length. Rubbed down rails shall be activated immediately.
- Activation of bonding surface
- The prepared bonding surface shall be activated over its whole length using a PE bottle with felt insert. Immediately after this, the activator that has not yet evaporated shall be wiped off completely with a cleaning cloth (wipe on/wipe off method).
  + Flash-off time:
    at least 10 minutes
  + Time until application of adhesive:
    maximum 24 hours
  + Replacement interval for felt insert:
    when no longer functioning
  + Replacement interval for PE bottle:
    at least once per day
- Applying adhesive to the securing rail
- The adhesive shall be applied to the activated bonding surface in a straight circular bead over the whole length of the part. The adhesive bead shall be interrupted for approx. 10 mm at the rivet holes to avoid adhesive being squeezed out at visible areas.
- Application of adhesive
  + Bead geometry:
    round bead
  + Bead diameter:
    approx. 6 mm
  + Dwell time of adhesive in static mixer:
    15 minutes maximum
  + Time between adhesive application and joining:
    15 minutes maximum
  + Dwell time of adhesive on rail:
    15 minutes maximum
  + Time until loading (hardening period):
    approx. 7 days

Practical note

Observe the application instructions from the adhesive manufacturer. If the described joining method is not adhered to, the adhesion will not attain the necessary quality.

The securing rail with adhesive shall be joined to the inside of the vehicle within 15 minutes. Otherwise there could be excessive forces and the sidewall could thus be damaged.

7.6.5.4 Rivet spacing when retrofitting load rails to the vehicle sidewall

Practical note

The maximum rivet spacing (see table) shall be observed in all driving conditions. Otherwise there could be excessive forces and the sidewall could thus be damaged.

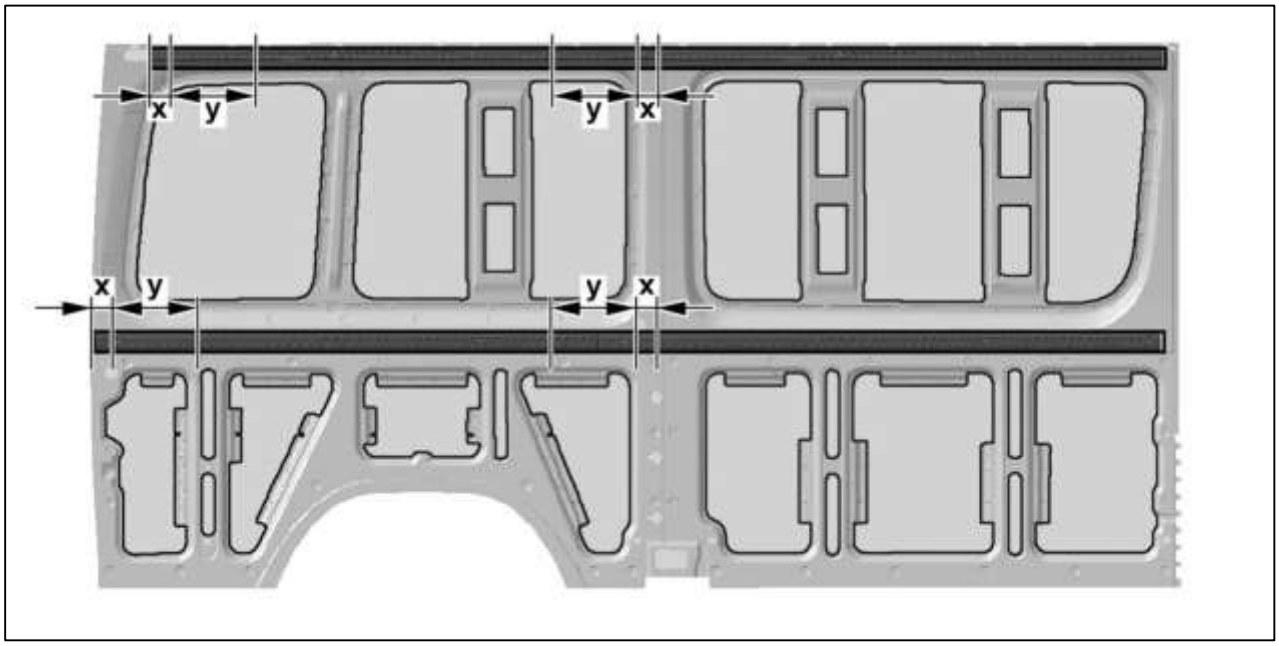

Rivet spacings when retrofitting load rails to the vehicle sidewall

Rivet spacing	Measurement X maximum in [mm]	Measurement Y maximum in [mm]
Rivets plus adhesive	75	450
Rivets (without adhesive)	25	225

7.6.5.5 Preparation for shelf installation

PR no. 6B4 “Preparation for shelf installation” (“Fastening rings for securing loads”) is available ex-works to simplify the subsequent installation of shelves. This package uses brackets for the roof cross struts and body brackets on the vehicle floor.

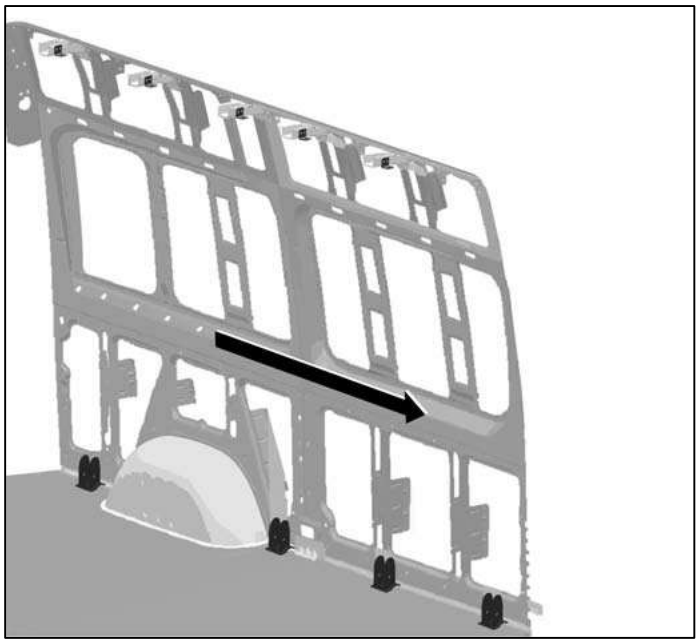

Scope with PR nos. 6B4/6B8 with marked areas

Arrow direction of travel

The following points shall be observed when the shelf preparation is used:

- Shelf boards are not allowed to be wider than 450 mm.
- The max. load capacity is 80 kg/m.
- The shelf supports shall be manufactured from steel (at least ST235JO in accordance with DIN EN 10025) with a minimum cross-section of 60 mm x 40 mm x 3 mm (length x width x thickness).
- The shelf supports are to be bolted to the brackets on the floor.

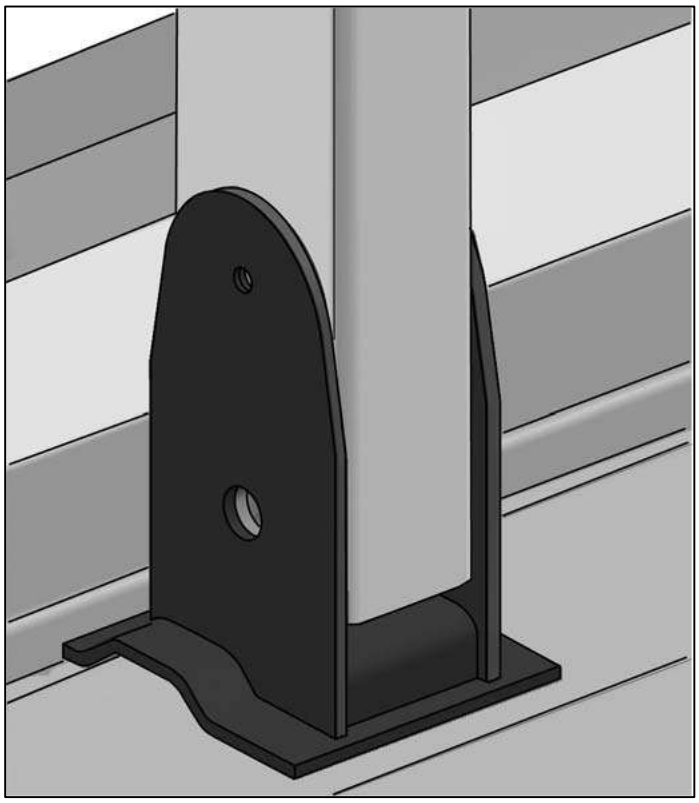

Bolt holes in brackets on floor

- 2 brackets per support shall also be fitted on the support/bracket bolt connection to fasten the wooden floor (contact surface for each bracket at least 1200 mm^2, measurements 60 mm x 20 mm).
- On the roof cross struts, steel tube with a rectangular profile 60 mm x 40 mm x 3 mm is bolted to the brackets. The shelf supports are to be bolted to this rectangular profile at the top.

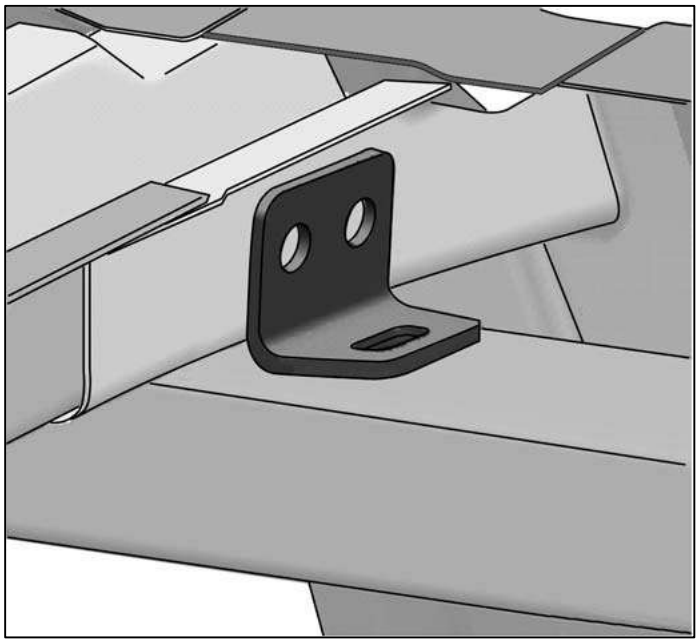

Holes for bolting longitudinal tube to roof cross strut

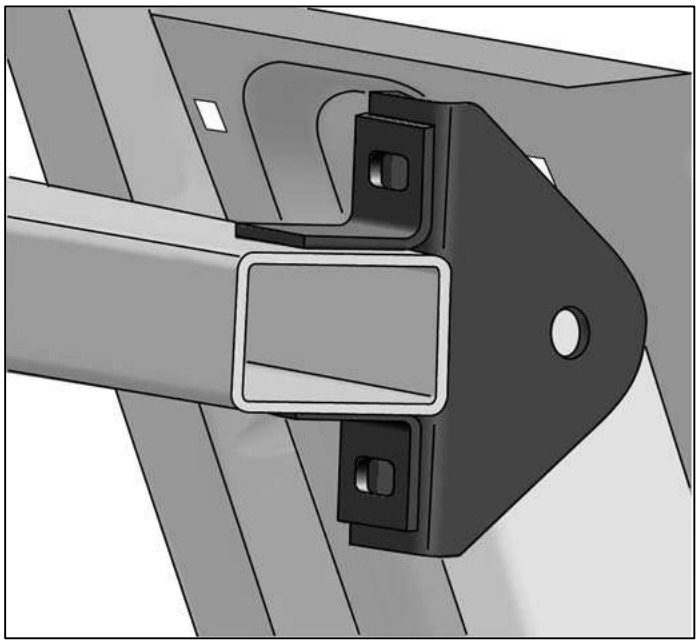

Connection of longitudinal tube to support

– The longitudinal tube is not allowed to be connected to the partition or the rear gate.

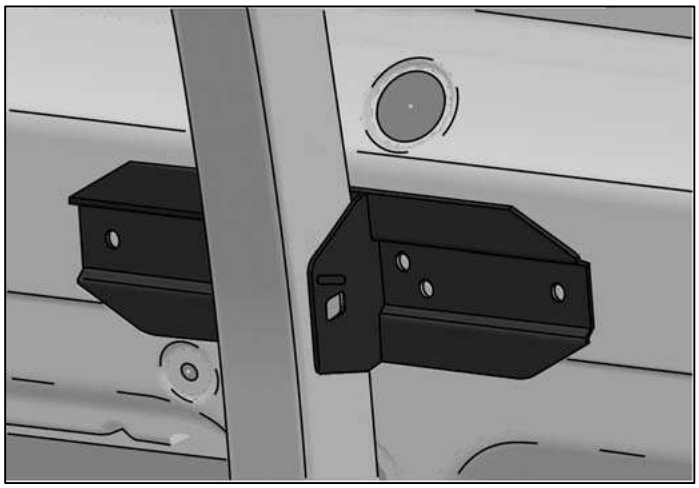

Connection suggestion bracket to bracing belt

– In addition to fastening the shelf supports to the floor or to the cross struts, it is necessary to fasten them to the bracing belt with a bracket. The fastening is done with a bonded joint and rivets. A minimum bonding surface of 7000 mm^2 is required.

The minimum flexural strength around the vertical axis shall be greater than $E \times I > 3.6 \times 10^8$ Nmm^2.

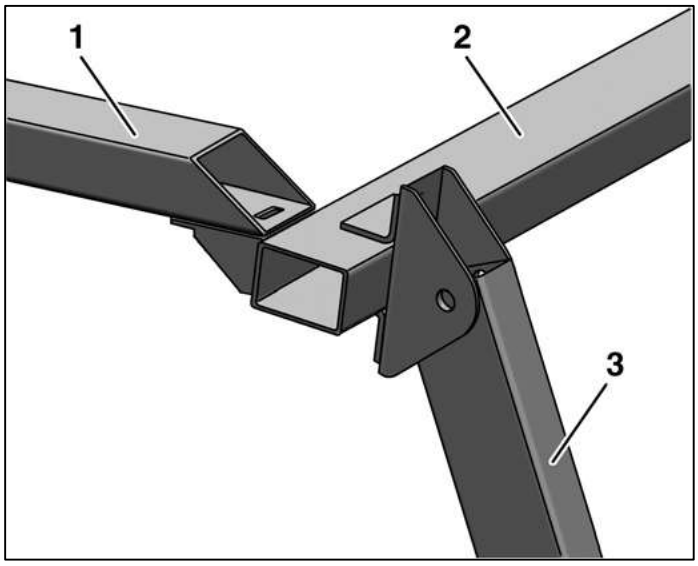

Additional connection of longitudinal tube

[1] Connecting rail

[2] Longitudinal tube

[3] Support

- If the first or the last support is positioned more than 300 mm from the roof cross strut, the longitudinal tubes shall be connected to each other.

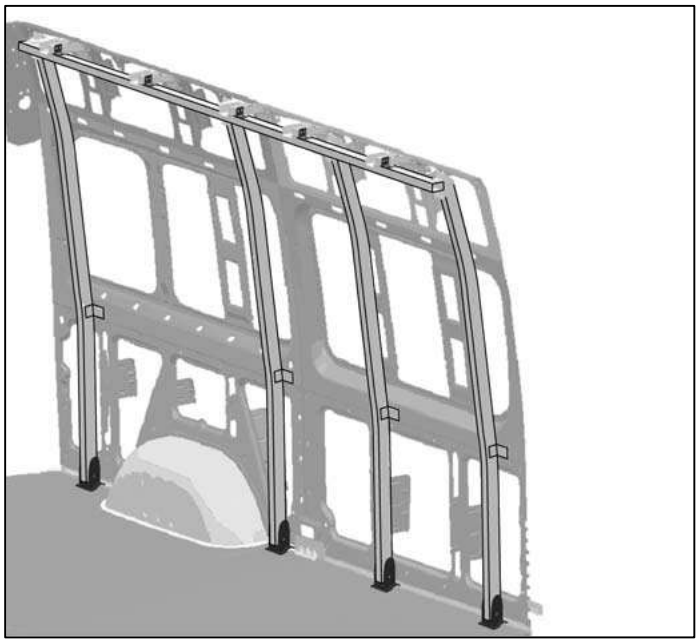

Design suggestion shelf connection with ZE6

7.6.6 Loading cranes

The crane size shall be suitable for the chassis size.

Loading cranes shall be secured on a mounting frame to reduce the load on the frame (see 8.1 “Assembly frame”).

The compliance with the permitted axle loads should checked with the aid of a weight assessment.

The stability of the vehicle must be guaranteed by the body builder. The swivel range of the crane must be limited accordingly.

In Germany, loading cranes mounted on vehicles shall comply with the accident prevention regulations.

Please observe the applicable regulations in your respective country.

The assembly instructions from the crane manufacturer must be followed.

Information

If there are additional platform or tipper bodies, the dimensions of the assembly frame longitudinal member can be found in the platform body
(see chapter 8.6 "Platform bodies") or tipper body
(see chapter 8.9 "Tipper bodies") tables.

Practical note

Supporting equipment shall be provided on all loading cranes. We recommend hydraulic supports.
Do not raise the vehicle with the supports otherwise the frame will be damaged.

7.6.6.1 Loading crane body behind cab

Loading cranes and supports shall not impair the function of other equipment.

Assembly frame

- Maximum crane load torque (kN x l): 25 kNm
- See 8.1 "Assembly frame" for section moduli (W_X) and material properties.
- For profile dimensions of assembly frame longitudinal member (see 8.1 "Assembly frame").
- During crane operation, the stability shall be ensured by sideways extending outriggers.
- Outriggers that extend beyond the vehicle outline shall be marked with striking paint colours, reflectors and warning lights.
- Determine the length of the platform according to the position and weight of the loading crane observing the gross axle weight ratings.
- A safety certificate from the responsible department is required if the maximum crane load torques are exceeded. The crane mounting shall be reinforced.
- The vehicle is only allowed to be used on level, surfaced roads.
- A frame extension can be necessary due to the resulting load distribution.
- If a crane superstructure behind the cab requires a stronger assembly frame than for the body, the loading crane can be mounting on a shortened assembly frame (see the following illustration). The bevelled short assembly frame shall have a length $l_M \geq 35\%$ of the wheelbase.
- A safety certificate from the responsible department is required for this mounting method.

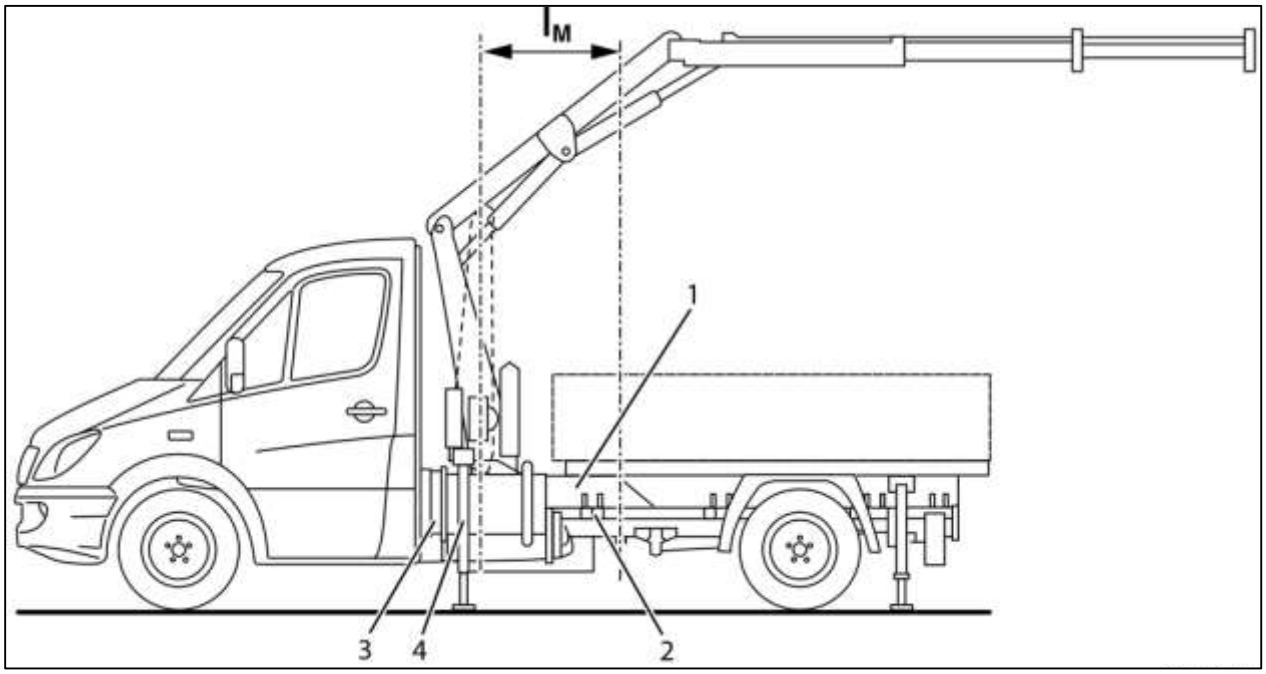

Loading crane mounting

[1] Assembly frame for loading crane

[2] Body brackets

[3] Loading crane mounting

[4] Side support

l_M Length of loading crane assembly frame

7.6.6.2 Loading crane body at end of frame

Warning note

The minimum front axle load shall be observed in all load states (see chapter 4.1.1 "Steerability"). Otherwise sufficient driving stability is no longer guaranteed.

- Loading cranes shall be secured to an assembly frame made from steel.
- Maximum crane load torque (kN x l): 25 kNm
- See 8.1 "Assembly frame" for section moduli (W_X) and material properties.
- For profile dimensions of assembly frame longitudinal member (see 8.1 "Assembly frame").
- During crane operation, the stability shall be ensured by laterally extendable support brackets

7.6.7 Tail lift

7.6.7.1 General

Prior to installation of a tail lift, the existing installation space shall be checked by the body builder. Restrictions on the installation space due to installed exhaust and tank systems shall be taken into account.

Mounting the tail lift on chassis
For the subsequent installation of a tail lift on chassis, we recommend the use of the optional extra "Preparing the tail lift electrically" (PR no. 5S4).
Please also comply with 6.4.4 "Additional electrical circuits" for electrically or electrohydraulically driven tail lifts.

Mounting the tail lift on station wagons
Please consult the responsible department (see 2.2 "Body builder guidelines, consulting") about subsequent attachment of a tail lift on panel vans

7.6.7.2 Requirements for fitting a tail lift

Practical note

When mounting an electro hydraulic tail lift, a generator, a high-power battery and an additional battery must be used.

- In the EU, tail lifts must comply with EU EN 1756-1.
- In the Federal Republic of Germany, tail lifts must correspond to the accident prevention regulations (UVV).
- The maximum permitted rear axle load is not allowed to be exceeded.
- The minimum front axle load shall be observed in all load states (see chapter 4.1.1 "Steerability").
- The stability shall be guaranteed by the body builder in all operating modes.
- Determine load distribution with calculations. Take all optional equipment into consideration.
- If necessary, shorten body length and rear chassis overhang accordingly (open prototype).
- We recommend using hydraulic supports.
- When installing a tail lift, the legal guidelines for "skid plate" and "lighting device" of each country must be observed.
- The maximum load spacing is 600 mm, related to the standard rear gate/standard end cross member.
- Anti-roll bars are recommended on the front and rear axles.
- The end cross member is only allowed to be cut after consultation with the responsible department (see 2.2 "Body builder guidelines, consulting").
- The stability of the vehicle shall be ensured by the user during loading and unloading.

Practical note

The permissible lifting load torque of the tail lift used must not be exceeded.

7.6.7.3 Attaching a tail lift

The attachment of the tail lift shall be configured as described in chapter 7.2.2.2 "Attachment to rear frame".
An additional torque support via at least two bolted connections with spacer bushes (for example on assembly) shall be provided.

- Place the assembly frame as far forward as possible and attach to chassis frame with force-locking connection.
- An assembly frame is not required on vehicles with standard panel van body.

If modifications to the underbody guard are necessary due the attachment of a tail lift, the strength and flexural strength of the underbody guard shall not be changed (see chapter 7.6.8 "Underbody guard").

Practical note

Do not raise the vehicle with the supports otherwise the frame will be damaged.

Permissible power of the tail lift

Type	**Wheelbase [mm]**	**Lifting capacity up to [kN][3]**		**Minimum dimensions of assembly frame - longitudinal member [mm]**
		Chassis	**Panel van[1]**	
Crafter 30	3250	5	5	without
	3665	5	5	
Crafter 35	3250	5	5	without
	3665	5	5	
	4325	5	5	
	3250	7.5 [2]	--	120 x 50 x 4
	3665	7.5	5	or factory dropside PR no. 5S2
	4325	7.5	5	
Crafter 50	3665	5	5	without
	4325	5	5	
	3665	7.5	5	80 x 45 x 3
	4325	7.5	5	or factory dropside PR no. 5S2
	3665	10	5	120 x 50 x 4
	4325	10	5	

[1] without assembly frame

[2] version with torque support on assembly frame

[3] at nominal distance 600 mm

7.6.8 Towing bracket

- We recommend using Volkswagen approved towing brackets on the provided body-in-white mounting points (rear longitudinal member) (see 10.3 "Hole patterns for towing bracket").
- Access to the spare wheel shall be ensured when towing brackets that do not have a removable ball head are installed (in particular when vehicle is fully loaded).
- Attachment of the towing bracket including clearances shall meet the requirements of the respective countries: in the EU as per ECE-R 55 and additionally according to DIN 74050 in the Federal Republic of Germany.
- In case of deviations from the accident prevention regulations (UVV), a certificate from the professional association for vehicle ownership in Hamburg must be requested in the Federal Republic of Germany for the admissibility of these deviations (see 2.9 "Accident prevention").
- Retrofitting a towing bracket is in principle without problems in technical terms if the optional equipment PR no. 1M5 – "Preparation for towing bracket" is present (see 7.6.7.3 "Attaching the towing bracket").

Information

Regarding the dependencies on towing weight, vehicle overhang and trailer stabilisation, see chapter 4.3.4 "Vehicle overhang".

Practical note

Do not attach the towing bracket to the end cross member on the frame.

Practical note

When retrofitting a towing bracket, a tank heat shield is required for the following vehicles:
- 4-cylinder diesel engine with 4.6 t/5 t
For more information, please contact your Volkswagen customer service.

7.6.8.1 Dimensioning the towing bracket

The size of the towing bracket is set according to the D value.

$$D = \mathrm{g} \times \frac{m_k \times m_a}{m_k + m_a}\ (kN)$$

D = towbar force in kN
m_k = permitted total mass of tractor vehicle in t
m_a = permitted total mass of trailer in t
g = 9.81 m/s²

7.6.8.2 Clearance measurements for towing bracket

The specified fitting dimensions and clearances must be adhered to. RREG 94/20/EC and ECE-R 55 are applicable within the EU. Any other applicable national regulations must be taken into account.

When the vehicle is loaded with the permitted total mass, the centre of the coupling ball is permitted to hang between 350 mm and 420 mm above the road surface. This applies to vehicles with a permitted total mass < 3,500 kg. Off-road vehicles are excepted.

Open jaw coupling

The distance from the centre of the coupling bolt on the towing bracket to the end of the body is allowed to be a maximum of 300 mm. The required clearances shall be observed.

Safe operation of the coupling shall not be impaired.

Mounting an open jaw coupling at the front is not permitted.

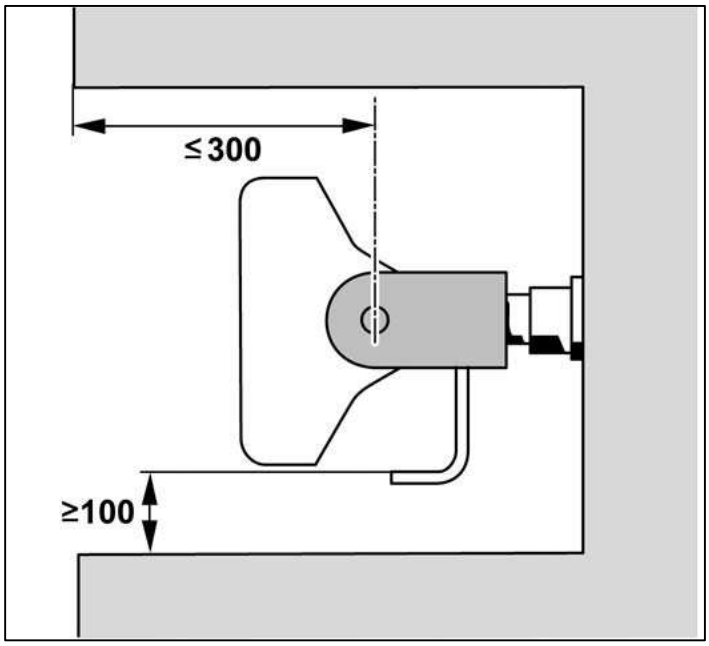

Open jaw coupling seen from above

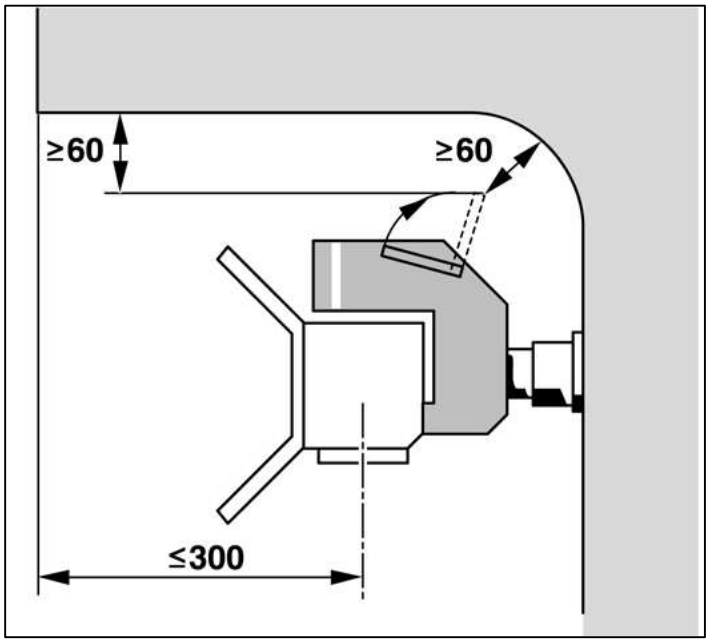

Open jaw coupling seen from side

Ball hitch

The specified clearances shall be observed.

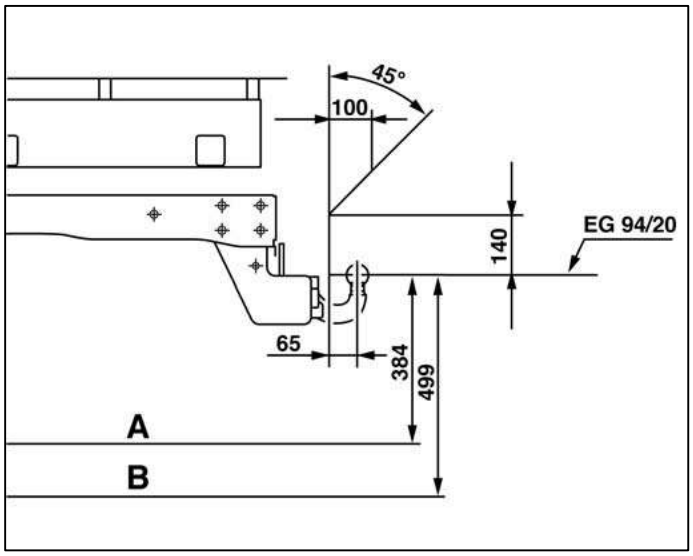

Ball hitch seen from side

A Loaded

B Empty

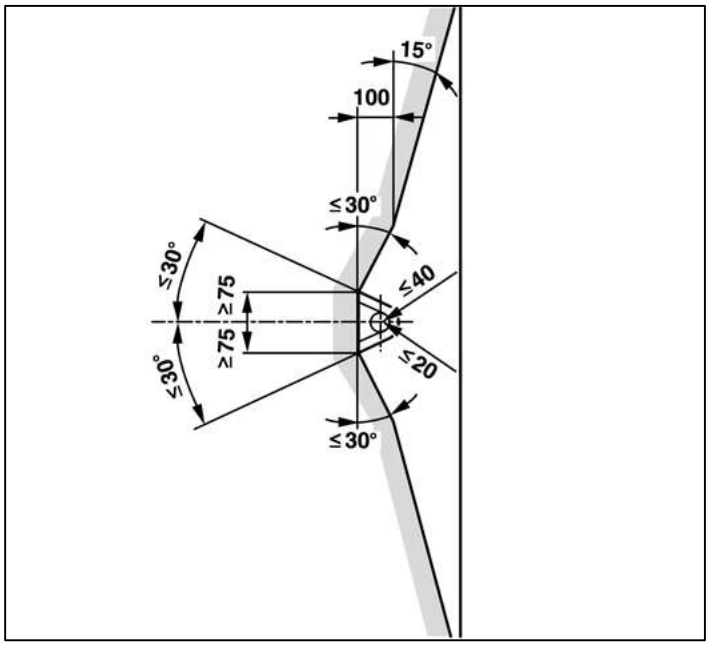

Ball hitch seen from above

Practical note

On towing brackets with removable ball head, operating instructions indicating the special features and the use of the coupling must be included with the vehicle.

7.6.8.3 Attaching the towing bracket

Only towing brackets/tow hitches are allowed to be attached to the provided body-in-white mounting points (rear longitudinal member) (see chapter 7.2.2.2 "Attachment to rear frame").
On the panel van, a further fastening on the frame end cross member is also required for support.

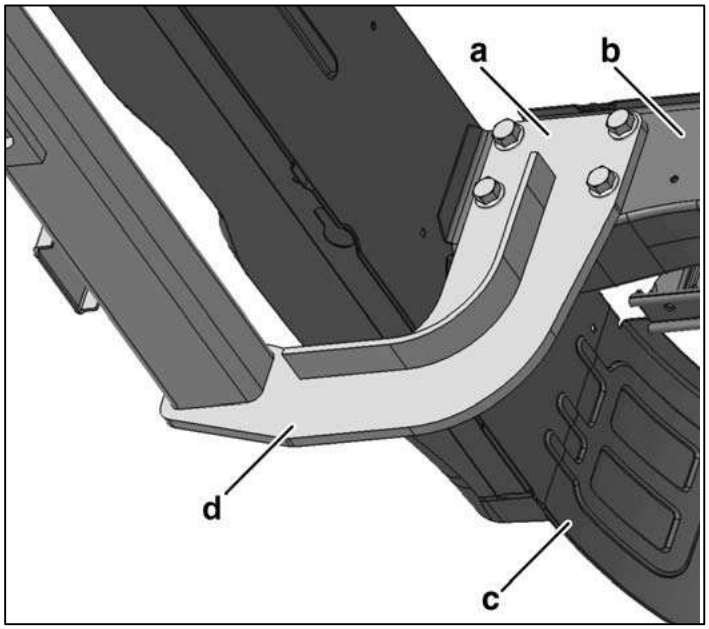

Interior view

a Attaching the assembly stand to the frame longitudinal member

b Frame longitudinal member lower chord

c Frame end cross member

d Towing bracket assembly stand

- Attachment to the underbody impact guard is not permitted.
- Modifications to the underbody impact guard must be coordinated with the responsible test institution (TÜV). The strength or flexural strength is not allowed to be affected.
- If a frame extension is necessary, spacer bushes shall be fitted on the frame as reinforcement to secure the tow hitch or end cross member (see 7.2.1.3 "Drilling on the frame"). This can lead to limitations of the trailer weight and drawbar load.

You will find the hole patterns with measurements for attaching the towing bracket in chapter 10.3 "Hole patterns for towing bracket".

The following optional equipment is available ex-works for retrofitting towing brackets depending on the prototype:

PR number	Description
1D7	Preparation for towing bracket - socket - electrics for trailer socket (serves as power supply for trailer including the lighting control).
1D8	Preparation for towing bracket (tow hitch, socket, cables) Cross member for towing bracket. A special cross member with mounting plate for attaching a towing bracket is mounted on the rear of the vehicle. The configuration of the cross member depends on the vehicle tonnage.
1D5	Towing bracket (open jaw coupling) Open jaw coupling for towing trailers with drawbar. The configuration of the open jaw coupling depends on the vehicle tonnage.
1D2	Towing bracket, removable and lockable (ball head) Removable ball head coupling for towing trailers with ball head).
1D1	Fixed ball head towing bracket Rigid ball head coupling with installation dimension raised by 50 mm.
1M0	Towing bracket with ball head coupling for increased trailer load 2.8 t/3.0 t Attachment of a rigid ball head coupling with a maximum permitted, braked trailer load of 2.8 t for the 3.5 t weight variant and 3.0 t maximum for 5 t weight variant. The permitted drawbar load is 120 kg.
1M1	Preparation for towing bracket with maximum trailer weight increased to 3.5 t
1M4	Towing bracket with ball head coupling and increased maximum trailer weight 3.5 t maximum trailer weight (LT50/LT35) Attachment of a rigid ball head coupling with a maximum permitted braked trailer weight of 3.5 t for the 5 t weight variant
1M5	Preparation for towing bracket (electrics only)
1M7	Preparation for towing bracket Increased axle load 2.8 t/3 t without tow hitch

7.6.9 Underbody impact guard

7.6.9.1 Rear underbody impact guard

The factory-fitted rear underbody impact guard (not on panel and window vans) complies with EU guideline 70/221/EEC.

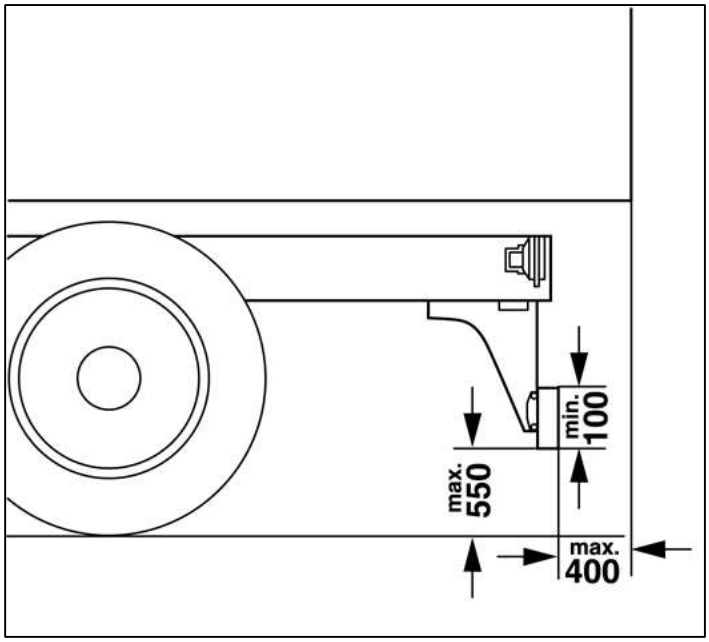

Side view of underbody impact guard position

Modifications to the underbody impact guard are not permitted.
Coordinate the responsible test institution (TÜV) in advance if modifications are unavoidable.

In Germany, an underbody impact guard is required according to EC Directive 70/221/EEC if:

- The distance from the end of the vehicle to the last rear axle is more than 1000 mm.
- The distance between the road and the chassis or main components of the body over the whole width of the vehicle is more than 550 mm while the vehicle is unloaded.

Exceptions are tractor units, work machinery and vehicles whose purpose cannot be fulfilled due to the underbody impact guard.
If an underbody impact guard is required, it shall comply with the EU directive 70/221/EEC and shall be presented by the body builder.
The underbody impact guard shall be mounted as far as possible to the rear of the vehicle.

Dimensions

- Distance from road to underbody impact guard (unladen vehicle) 550 mm maximum.
- Width:
  + Maximum = width of rear axle (outer edges of tyres).
  + Minimum = width of rear axle minus 100 mm on each side. The widest axle is decisive.
- Profile height of cross member at least 100 mm.
- Edge radius at least 2.5 mm.

Modifications to the underbody impact guard

If the underbody impact guard needs to be moved when the overhang is extended, then the attachment shall correspond with that on the original vehicle.
If changes to the underbody guard are necessary due to attachments (such as tail lift), the strength and the flexural rigidity of the underbody guard should not be changed.
The national laws/guidelines shall be observed if modifications are made to the underbody skid plate.

7.6.9.2 Side protection

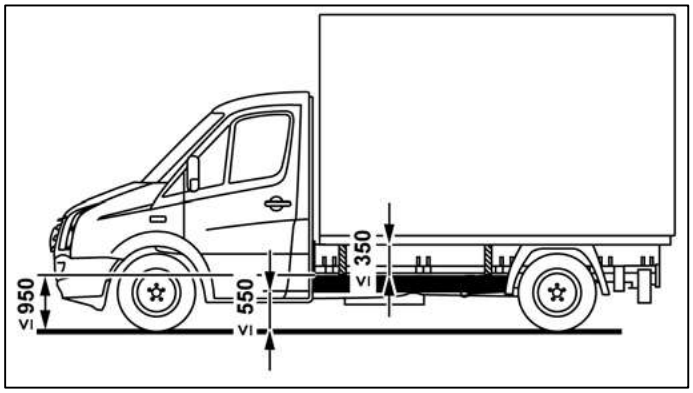

Position of side protection

In accordance with EC guideline 89/297/EEC, side protection is required on vehicles with over 3.5 t gross vehicle weight rating. Exceptions are tractor units, work machinery and special vehicles whose purpose cannot be fulfilled due to the side protection. Components, for example, battery box, air tank, fuel tank, lights, reflectors, spare wheels and tool boxes are allowed to be installed in the side protection if the specified spacings are observed.
Brake, air, hydraulic lines and other parts shall not be fastened to the side protection.
The function and accessibility of any of the assemblies on the vehicle are not allowed to be impaired.
The side underbody impact guard is fitted to the platform at the factory (PR no. 1M5).

When retrofitting:

- The measurements shown in the diagram are not allowed to be exceeded.
- Protection components shall be attached in accordance with EC Directive 89/297/EEC.
- Attach the protection to cover the area from the front to the rear as fully as possible.
- Bordering parts are allowed to overlap. The overlapping edge shall point to the rear or downwards.
  A gap between the segments of 25 mm is permitted if the rear part does not protrude further than the front part.

The side protection can be made from a continuous even surface. The outer surface shall be smooth and flat in the main. The parts of the protection shall be mounted rigidly and permanently. They shall be made from metal or from another suitable material.
The distance between the outer surface of the underbody guard and the outer edge of the vehicle is allowed to be no more than 120 mm. The edge radius shall be at least 2.5 mm.

8 Implementations of bodies

In this chapter, you will find information that concerns the body to be produced by the body builder.

8.1 Assembly frame

For a perfect connection between the chassis and body, a full length assembly frame or a substructure that takes on the function of a full-length assembly frame is required (see chapter "Assembly floor as floor panel" and chapter 8.2 "Self-supporting bodies").
The body shall be attached to the frame using the body brackets fitted at the factory following the frame profile (see chapter 8.1.1.2 "Assembly frame with stepped frame").
Exception: on vehicles with stepped frame, the assembly frame longitudinal members can pass through straight from front to back.

8.1.1 General information on material quality

Material qualities for specified assembly frame made of steel:

- Assembly frame with bracket attachment (force-locking) = H240LA or S235JRG2.
- For steels H240LA or S235JRG2 in accordance with the DIN EN standard, the same materials from the US standard SAE/ASTM J403/J412/J413, the Japanese standard JIS G3445 and the UK standard BS 970 can be used.

Material	**Ultimate yield strength** [N/mm2]	**Tensile strength** [N/mm2]
H240LA (DIN EN 10268-1.0480)	260-340	≥ 240
S235JRG2 (DIN EN 10025-1.0038)	≥ 235	340-510

Minimum required section modulus for the assembly frame Wx[1] [cm³]			
Version	**Platform/panel van**	**Tipper/elevated work platform**	**Crane**
3.5 t	17[2]	30	40
4.6 t and 5.0 t	30[2]	40	40

[1] The minimum required section modulus for the assembly frame applies to the specified material properties and is to be provided by each individual longitudinal member of the assembly frame.

[2] Up to max. standard wheelbase. Above maximum standard wheelbase +10%.

- If assembly frames made from high-strength steels are used, they shall at least correspond with the strength of steel assembly frames.
- If an assembly frame made from aluminium is used, for example, it shall at least correspond with the flexural strength (E x I) of a steel assembly frame. The specifications of the aluminium manufacturer shall be observed.

Reference values for the modulus of elasticity [N/mm²]:

- Aluminium: 70000
- Steel: 210000

Information

If necessary, observe differing specifications in this chapter, see 8.6 “Platform bodies” and 8.9 “Tipper bodies”.

8.1.2 Design

8.1.2.1 General

The assembly frame cross members shall be placed above the chassis frame cross members.
The longitudinal members of the assembly frame shall be moved as far forward as possible to cover the area prone to bending behind the cab and thus prevent vibration problems.
The body shall be attached torsion-free to the body brackets of the frame longitudinal member.
The vehicle shall be parked on a level horizontal surface when the body is fitted.

If very high longitudinal members are required or if low frame heights are to be achieved, with force-locking connections, the U-profile can be:

- closed as a box,
- one slotted inside the other
- slotted together

This increases the section modulus and the torsional rigidity.

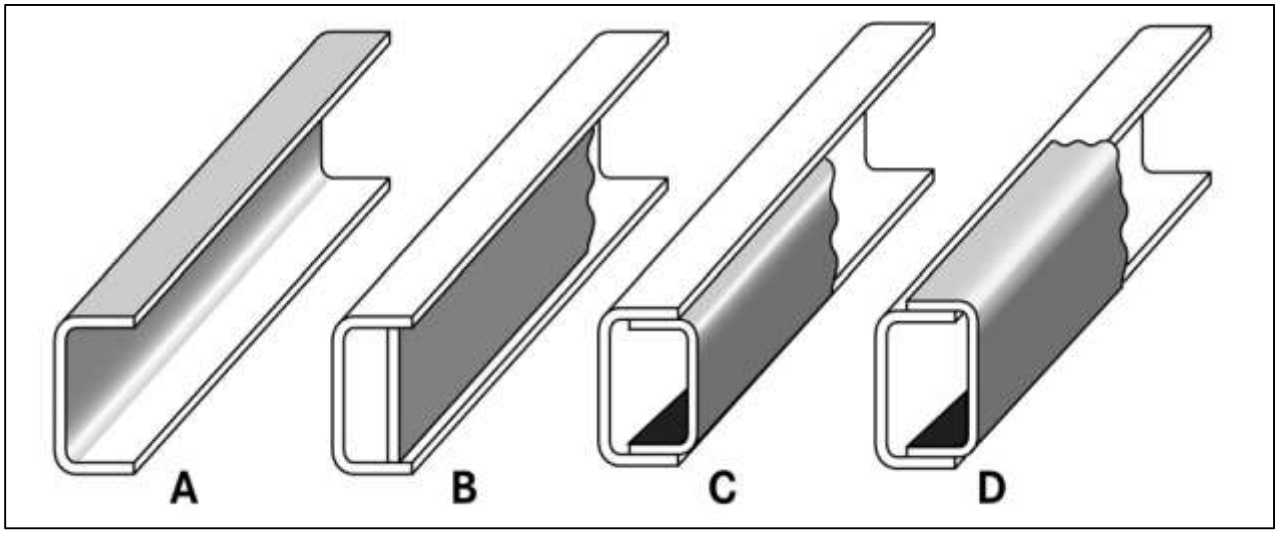

Frame profile

A Open U-profile

B Closed U-profile

C One U-profile slotted inside the other

D U-profiles slotted together

8.1.2.2 Assembly frame with stepped frame

On vehicles with stepped frame (gross vehicle weight rating ≥ 4.6 t), the assembly frame longitudinal members can run through straight from front to back.

8.1.3 Profile dimensions/dimensioning

Bevelled U-profiles or commercially available U-profiles for vehicle construction (not rolled sections) shall be used for the longitudinal members. Box sections can also be used as longitudinal member profiles.
The dimensions of the longitudinal members result from the required section modulus (W_X) for the body and chassis (see chapter 8.1.1 "Material quality general").
The specified section modulus and profile dimensions refer to frame longitudinal members with the same loading on each side.
Profile dimensions for assembly frame longitudinal members (open profile) can be found in the table.
The assembly frame and chassis frame should have approximately the same flange width.

Practical note

If several bodies are mounted on a chassis (such as a platform and tail lift), the definition of the mounting frame must be based on the larger of the specified moments of resistance.

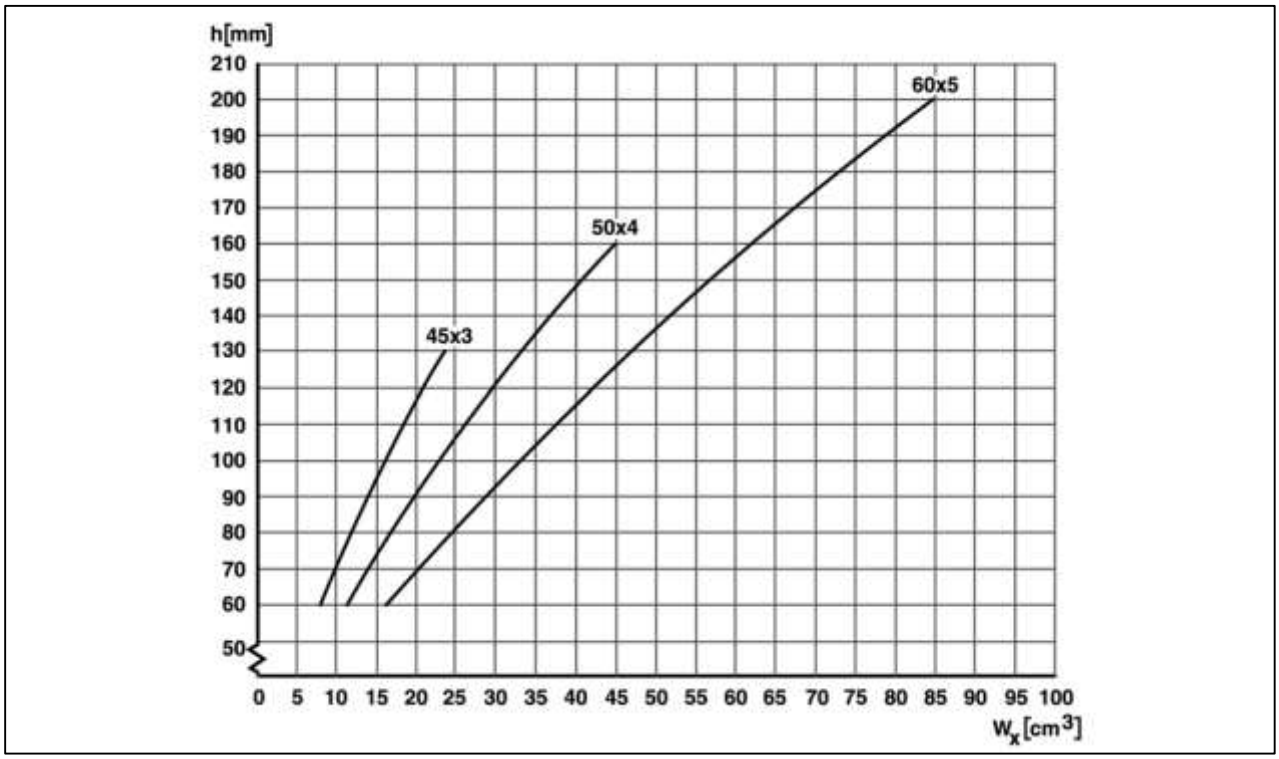

Dimensioning of longitudinal member

h	Profile height in mm
WX	Section modulus in cm3

8.1.4 Attachment to the frame

All of the body brackets provided at the factory are to be used for securing superstructures to the vehicle frame. They are located on the frame longitudinal member and further brackets can be added if necessary.
The securing bolts to be used are – as in the standard platform bodies – size M12 bolts, strength class 10.9. Fine-pitch thread is recommended.

Practical note

The minimum distance between the cab and body shall be > 50 mm.

With prefabricated assembly frames, the design tolerances of the chassis frame width (max. +6 / -3 mm) shall be taken into consideration.

Information

The positions of the prototype-dependent body brackets are shown in the offer drawings.

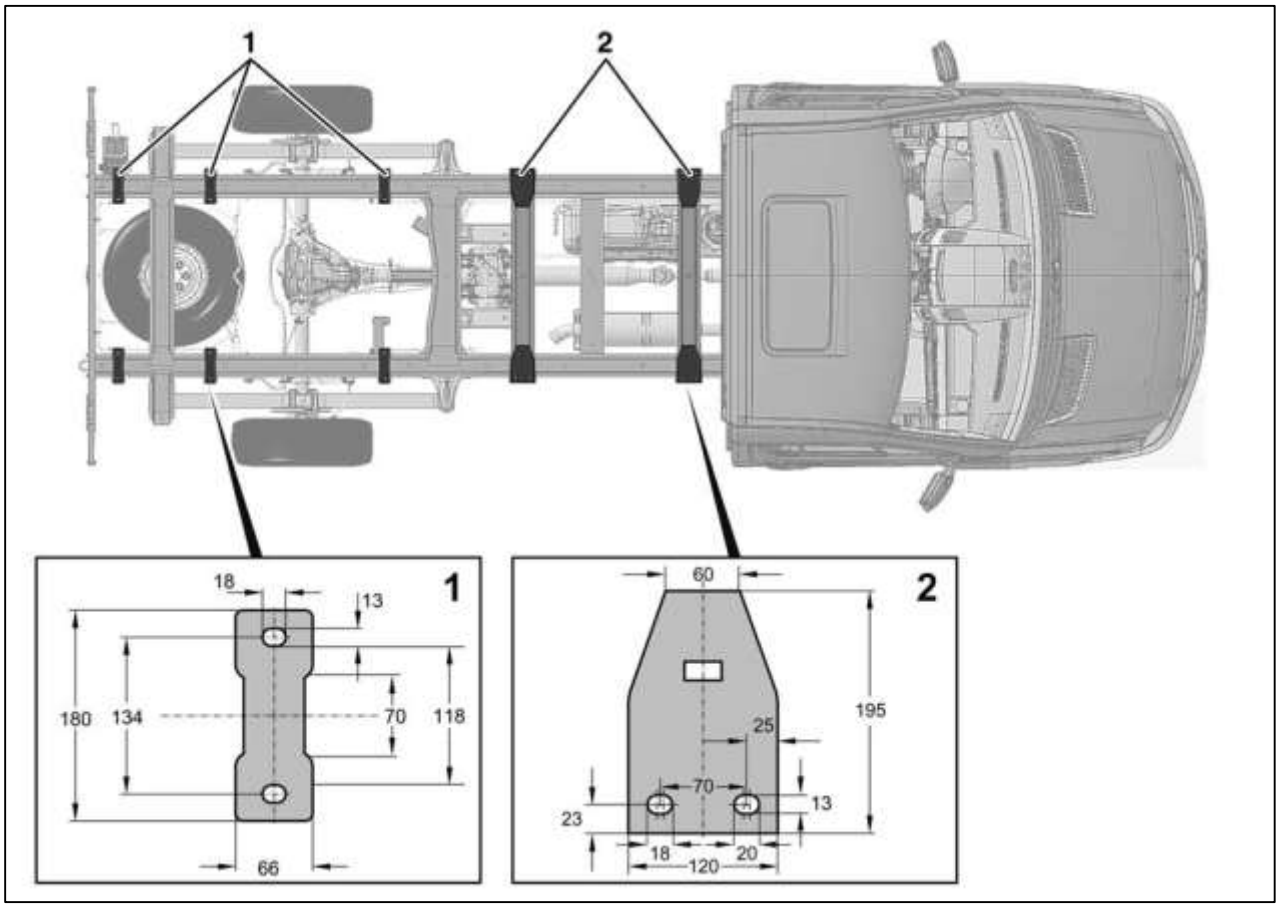

Implementation of mounting points on frame

8.1.4.1 Additional body brackets

If additional body brackets are required, observe the welding guidelines (see 5.2 “Welding work”).

- Hole welding is only permitted in the vertical webs of the frame longitudinal member.
- Welding is not allowed in bending radii.

Two screws are be used for each body bracket.
The securing bolts to be used are – as in the standard platform bodies – size M12 bolts, strength class 10.9. Fine-pitch thread is recommended.

8.1.4.2 Attachment of body brackets

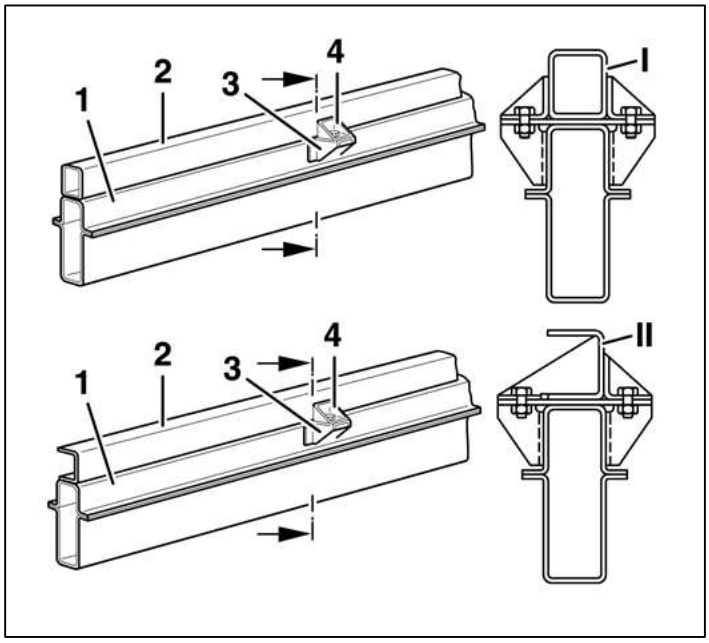

Example of body bracket design

I Box profile

II U-profile

1 Chassis frame

2 Assembly frame

3 Standard fastening bracket

4 Bracket

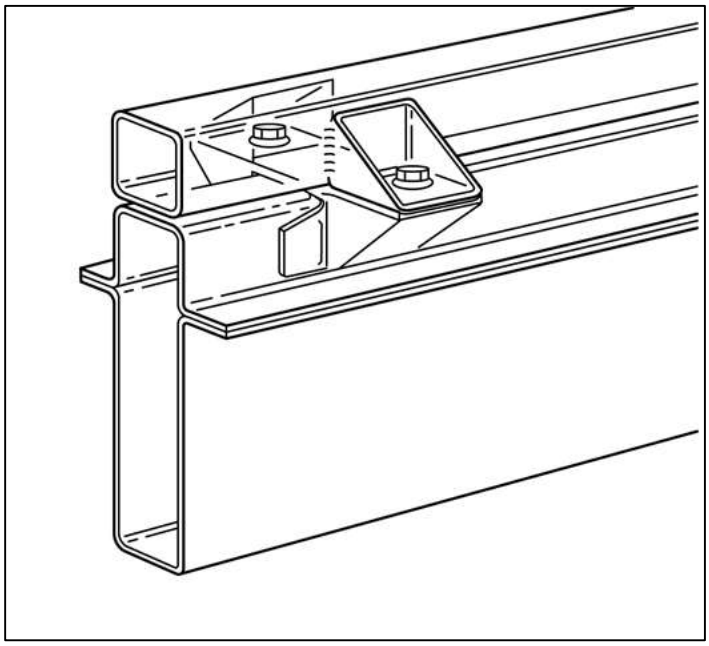

Bracket attachment with longitudinal member

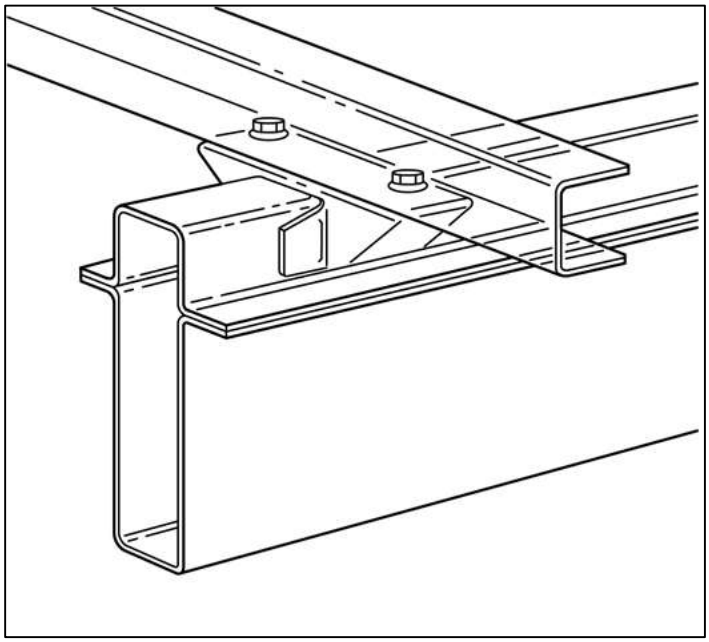

Bracket attachment with cross member

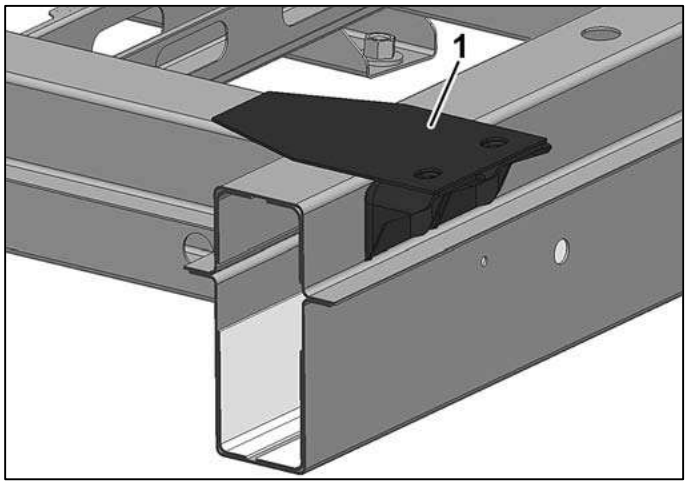

Body bracket with belted connection on outside

[1] Body bracket

The number of securing points shall be set so that the longitudinal and lateral forces are absorbed.
The right form of attachment is decisive for:

- the driving characteristics and operating safety of the vehicle
- the durability of the chassis frame and body.

8.1.4.3 Shear-resistant connection

Information

Please also note chapter 8.10 “Semi-trailer tractors”

In a shear-resistant connection, the longitudinal members of the assembly frame shall be fixed in the longitudinal and lateral directions. It is therefore only possible to move the assembly frame longitudinal member to a certain extent.
The attachment can be on the side of the upper chord on the frame longitudinal member. It is necessary to use spacer bushes that shall be welded to the frame as reinforcement.

For shear-resistant connections, a double support as shown in the illustration is required on each frame longitudinal member.

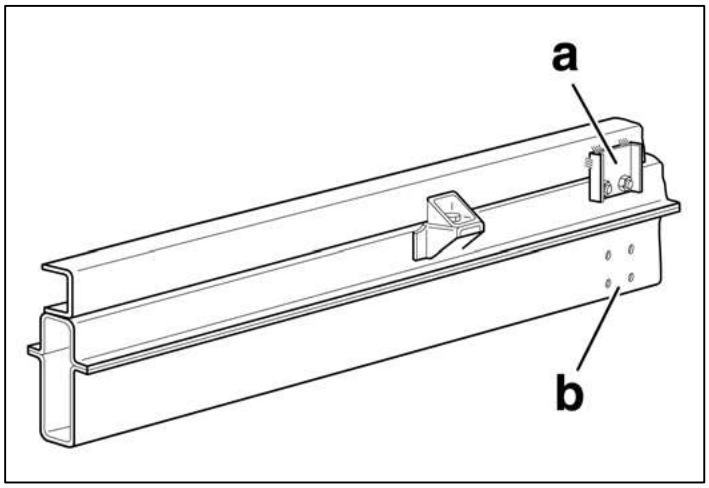

Double support (shear-resistant connection)

a Shear-resistant connection on end of frame

b Standard holes on end of frame

8.1.4.4 Bolted connection protected against loosening

On rigid superstructures (e.g. box bodies or elevated work platforms) bolted connections with spacer sleeves that are secured against loosening shall be used on the first body bracket behind the cab. The spacer sleeves shall be dimensioned so that they cannot be deformed.

When the 50 mm long spacer sleeves are used, a correspondingly longer bolt with a longer shaft also becomes necessary, so that, after application of the tightening torque, the bolted connection is more elastically stretched and preloaded than a short shaft bolt without spacer sleeve. This "expansion bolt connection" provides increased security against loosening of the bolt.

The thread projections in accordance with DIN 78 must be observed.

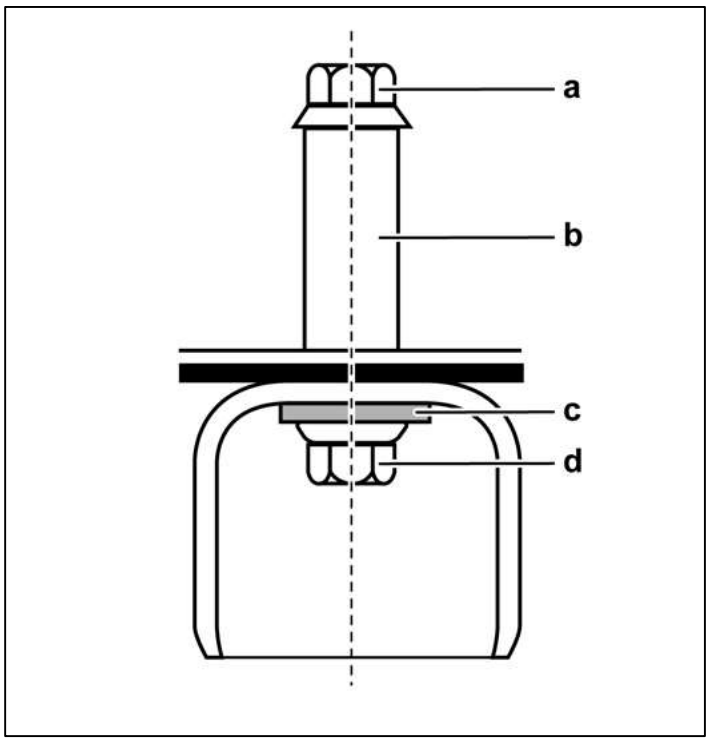

Design suggestion for bolted connection protected against loosening

a Bolt with flange, M12 x 90, strength 10.9

b Spacer sleeve 22-13 x 50

c Washer DIN 7349-13-ST

d Nut with flange M12 x 90, strength 10.9

8.1.5 Assembly floor as floor panel

An assembly frame with full-length longitudinal members is not necessary if the floor panel of the body can take on the function of the assembly frame.

Furthermore the longitudinal members can also be integrated into the body. If the assembly frame longitudinal member is divided by the cross members, a torsionally and flexurally rigid connection shall be formed between the longitudinal and cross members.

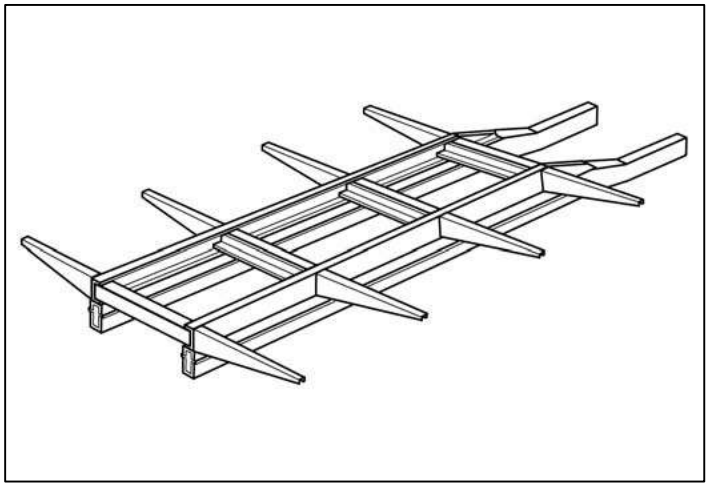

Example of floor panel design

8.2 Self-supporting bodies

An assembly frame with full-length longitudinal members is not necessary if the floor panel of the body can take on the functions of the assembly frame.
Self-supporting bodies shall correspond with the properties of the prescribed assembly frame. The floor panel of the body shall provide the replacement rigidity and the section modulus like an assembly.

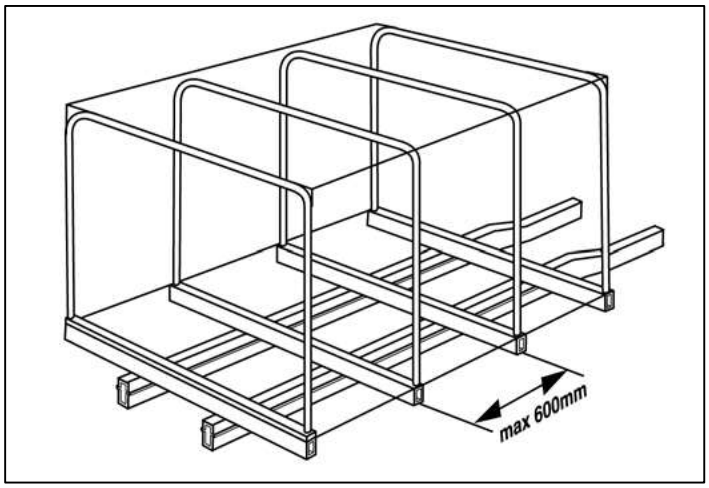

Example of body design

8.3 Modifications to interior

8.3.1 Retrofitting seats

Standard seats (e.g. front passenger seat) cannot be retrofitted in the body-in-white since there are no reinforcements or suitable connection points.
If necessary, Volkswagen will issue a safety certificate for modifications to the seat mounting (including seat box) and seat belt fastenings or the installation of seats other than those available from the factory.
The strength data for seats available ex-works is only valid in conjunction with the original attachment elements.
It is essential not to exceed the height of the centre of gravity (H-point) if retrofitting seats. Current information about this is available at 10.5 "Build dimension drawings".
When the seat belts are re-fitted, the prescribed bolts shall be used and tightened to the original torque.

Warning note

If seats other than those available from the factory are installed with factory seat belts, only belt locks may be used that fit with the buckles on the factory seat belts. Otherwise the seat belt cannot be locked in the belt lock as intended and persons could be injured in the event of an accident.

When installing seat belts and belt locks, only components from the production supplier may be used:

Contact data	
Postal address:	Autoliv B.V. & Co. KG Postfach 109 D-25333 Elmshorn
Telephone:	+49 4121 7970

If other seat belts and belt locks are installed than those available from the factory, ensure that all registration-related regulations (e.g. belt lock position) are observed.

8.3.1.1 Passenger/transport compartment

For the panel van, the body-in-white floor panel for retrofitting seat benches as optional equipment with PR no. 3UZ (window van floor panel) is available from the factory. The number of attachment possibilities on the window van floor panel is related to the prototype and the equipment and registration variant (the fixings for the seat benches are not included).
You can obtain more information on optional equipment from your Volkswagen customer service, the responsible department (see 2.1 “Product and vehicle information for body builders”) or 3.10 “Optional equipment”.
Rear seats with 2 or 3-point seat belts differing from the standard seats must meet the requirements of EC Directive 76/115/EEC and 74/408/EEC.

Warning note

The attachment of seats to the wheel housing is not permitted. In the event of an accident, persons could be injured if the seats are torn out of the anchoring points and further damage could be caused to the vehicle.

8.4 Modifications to closed panel vans

8.4.1 Floor panel/sidewalls

The body and chassis frame form a self-supporting unit in the panel van. When modifying or installing body parts only weld them if a bonded joint is not possible.
Windows, roof hatches, air inlets and air outlets shall therefore be surrounded by a stable frame.
This frame shall be connected to other body elements by means of a force-locking connection.

8.4.2 Partitions

Partition walls do not have any weight-bearing function. Partitions in the panel van can be complete or partial.
The following partitions are available ex-works as optional equipment:

PR number	Description
3CF	Full partition
3CG	Full partition with window
3CH	Full partition with sliding window
3CC	Full partition at C-pillar
5WB	Preparation for retrofitting partition
5WJ	Partition with sliding door
3CA	Omission of partition

You can obtain more information on optional equipment from your Volkswagen customer service, the responsible department (see 2.1 “Product and vehicle information for body builders” or 3.10 “Optional equipment”).

If installing non-factory-fitted partitions, make sure that the selected forced ventilation cross sections correspond to those of the factory-fitted partition.
This is important in several respects:

- Closing comfort of the doors
- Possible flow rate of the heating blower
- Pressure equalisation on airbag deployment

The minimum opening cross sections in the Crafter are approx. 150 cm^2 in total

The installed partition should have an type plate for clear identification.
If the partition is located behind the 1st seat row, bear the possible seat adjustment range in mind (comfort partition with larger bulge for the seat backrest).

If a non ex-works partition is located behind the first seat row then the standard bolt-on points and bonding surface shall be used if possible.

The partition should be adequately stable and cushioned with regard to acoustic comfort.
The strength of the partition shall be validated according to ISO code 27956, irrespective of the country in which the vehicle is to be marketed. Although validation according to this standard is not legally binding, it is a requirement of the trade association if the vehicle is used for commercial purposes. This strength validation shall be documented if the objective is to achieve a premium partnership.

8.4.3 Vehicle roof

You will find further information on modifications to the roof in chapter 7.2.11 “Roof of panel/window van”.

8.5 Bodies on chassis with platform/cowl panel

8.5.1 Platform

The platform on the basis of the chassis with single cab provides body builders with a basis for fully integrated superstructures (e.g. mobile homes) or special constructions and is available from the factory with the PR no. F5M/ZP5 (see 3.10 "Special equipment").

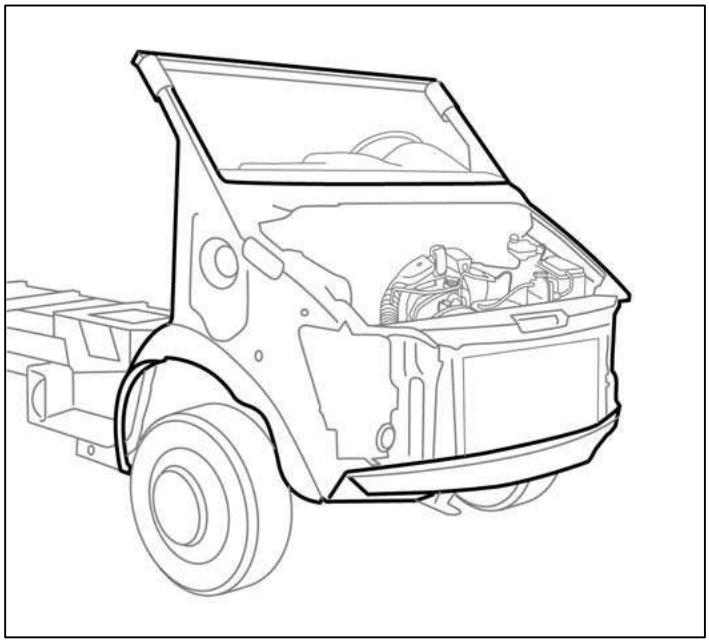

Platform

The national guidelines and laws shall be observed for bodies on the basis of the platform.
When superstructures are installed on a platform, a cab structure replacing the rigidity of the standard vehicle shall be created.
The front body area shall take the form of a self-supporting connection up to the B-pillar.
We recommend creating a new cell structure consisting of

- A-pillar
- B-pillar
- Roof cross members
- B-pillar substructure cross member

that corresponds with the original structure.

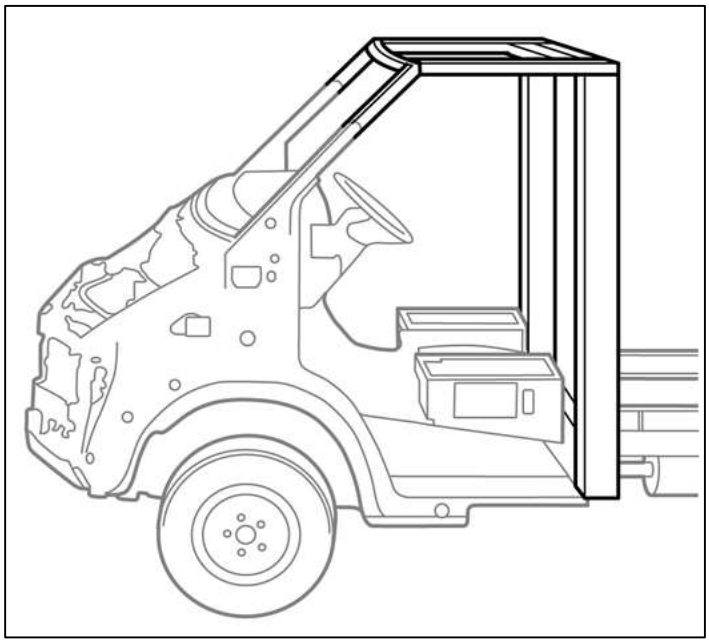

Design example for platform with cell structure

The connection of cross member connections and A or B-pillars of cab shall be form-fitting.
A separate and force-locking connection shall be formed between the headlight frame and A-pillar inner part - bonding is not permitted.
If a wing is not made from steel, the common connection of headlight frame, A-pillar inner part and wing is not permitted.
Furthermore the information in the following chapters shall be observed for bodies on the basis of the platform:

- 3.9 “Maintenance and repairs”
- 7.3.3 "Engine cooling system”
- 7.3.4 “Engine air intake”

Practical note

A safety certificate from the responsible department is recommended for bodies on the basis of the platform.

After all work on the vehicle, it is necessary to comply with the specified corrosion protection measures
(see 5.3 “Corrosion protection measures”).

Modifications to the bonnet

If the bonnet is modified, ensure that the water separation system integrated there for the heating air is not impaired. If necessary, the water separation system shall be replaced with equivalent function parts.

Practical note

To guarantee the operating safety and function of the bonnet, no modifications are allowed to be made to the kinematics of the standard bonnet (bonnet lock, hinges, buffers, arrester etc.).

8.5.2 Cowl panel

When the cowl panel (PR no. F5K/ZW5) is on the basis of the chassis with single cab, the cab rear wall and the cab roof are omitted at the factory. Furthermore an auxiliary roof cross strut is used across the B-pillars to stiffen the cab.
The cowl panel is used by body builders as the basis for mounting special constructions including the roof above the cab.
In addition, the cowl panel makes it easier to convert vehicles with special conversions having a direct access to the cab. Sample applications include campers, for example.
The national guidelines and laws shall be observed for bodies on the basis of the cowl panel.

Omission of/cutting B-pillar auxiliary roof cross strut

Rigidity measures will be necessary if the B-pillar auxiliary roof cross strut is to be cut or omitted (see 7.2.12 "Cutting cab roof and B-pillar roof cross strut").

Practical note

A detailed assessment from the responsible department (see chapter 2.2 "Body builder guidelines, consulting") is required for alternative replacement rigidity solutions used by the body builder.

A safety certificate from the responsible department is required for the replacement rigidity measure (see 2.2 "Body builder guidelines, consulting").

8.6 Platform bodies

For an even load on the chassis frame, the body shall be mounted using an assembly frame (longitudinal members made from U-profile) (see chapter 8.1 “Assembly frame”).
At least all of the body brackets provided at the factory are to be used for securing platforms to the vehicle frame.
are to be used for the measurements.
If the standard platform is subjected to point or point-like loading (e.g. transportation of cable drums, coils etc.), the substructure and platform floor shall be reinforced suitably for the load.
Before installing body:

- Weigh chassis and set body length.
- Chassis with double cab:
- If necessary , the rear frame overhang shall be shortened so that the permitted rear axle load is not exceeded and the minimum front axle load is guaranteed.
- Attach reflectors to the body in accordance with ECE R48 (in Germany § 51 a StVZO) (see chapter 6.5 “Lighting”).
- See 8.1 “Assembly frame” for section moduli (Wx) and material properties.
- For profile dimensions of assembly frame longitudinal member see diagram under 8.1.3 “Profile dimensions/ dimensioning”.

Practical note

If a superstructure has moving attachments, make sure that there is sufficient clearance from the base vehicle, otherwise attachments could collide with the base vehicle causing damage.

8.7 Box bodies

For an even load on the chassis frame, the body shall be mounted using an assembly frame (longitudinal members made from U-profile) (see 8.1 "Assembly frame").
At least all of the body brackets provided at the factory are to be used for securing box bodies to the vehicle frame.
On box bodies, bolted connections with spacer sleeves that are secured against loosening shall be used on the first and second body brackets in the area behind the cab. The spacer sleeves shall be dimensioned so that they cannot be deformed (see 8.1.4.4 "Bolted connection protected against loosening").
See 8.1 "Assembly frame" for section moduli (W_x) and material properties.

Information

For integrated box bodies/integrated boxes (see 8.17 "Partially integrated bodies").

8.8 Refrigerated vehicles

Observe the chapters:

- 7.5.1 “Retrofitting air conditioning system”.
- 7.5.3 “Ancillary drives”.
- 7.2.11 “Roof of panel/window van”.
- 6.4.6 “Retrofitting electrical devices”.
- The described requirements for reducing interior noise shall be met by the insulation material for refrigerated vehicles based on a panel van, see 7.4.4 “Reducing interior noise”

To facilitate repair of the panel van, accessibility to the components of the door mechanism (e.g. guide rails and hinges).

Practical note

The insulation in the panel van increases the weight of the doors, and therefore also the load on the hinges, carriage and lock systems.

8.9 Tipper bodies

The national guidelines and laws shall be observed for vehicles with tipper bodies.
On vehicles with automatic gearbox, it is not possible to drive hydraulic units via the gearbox-side ancillary drive (see 7.5.3 "Ancillary drives").
Please also comply with 6.4.4 "Additional electrical circuits" for electrohydraulic tipper drives.
The permitted axle loads shall be observed. Also refer to chapters 7.6.8.2 "Side protection equipment" and 7.6.8 "Underbody impact guard".

8.9.1 Tipper bearings

- The rear tipper bearings on three-sided and rear tipper bodies shall be placed as close to the rear as possible.
- The folded down dropside shall not knock against the frame end, the lighting systems or the towing bracket.
- For the front tipper bearings, provide guide brackets so that the tipper bearings are guided when the tipper is lowered.

8.9.2 Safety equipment

- Observe country-specific directives and laws.
- Fit a support (folding prop) to stop the tipper falling.
- Secure controls against accidental use.
- A "Tipper" warning lamp shall be connected as a visual warning when the tipper is not fully tipped back (driving position)

8.9.3 Tilting press

- The press carrier is secured on cross members in the assembly frame.
- The cross member of the assembly frame and the cross member of the chassis shall be arranged on top of each other if possible.
- On three-sided tipper bodies, the working point of the tilting press should be in front of the centre of gravity of the body and payload.

8.9.4 Assembly frame

If chassis are fitted with tipper bodies, sufficient dimensioning of the assembly frame is necessary due to high vehicle loads.

The following points shall be observed:

- Secure the assembly frame to the body brackets in accordance with chapter 8.1.4 "Attachment to the frame".
- Sufficient dimensioning of longitudinal and cross members made from steel.
- The rear area of the assembly frame is to be closed as a box and ,if necessary, stiffened with an inserted diagonal cross or other suitable measures.
- At least all of the body brackets provided at the factory are to be used for securing tipper bodies to the vehicle frame.
- The use of vehicles with tipper bodies is only possible for normal usage conditions. In difficult usage conditions, we recommend consulting the responsible department (see chapter 2.2 "Body builder guidelines, consulting").
- See 8.1 "Assembly frame" for section moduli (W_X) and material properties.

8.10 Tractor units

The conversion of chassis into semi-trailer tractors is possible if country-specific directive and laws are observed.
To increase the permitted gross weight rating of the semi-trailer vehicle (tractor + semi-trailer), additional information on the technical equipment for body builders is available. Please use the online contact form for this (see 2.1 "Product and vehicle information for body builders").
A safety certificate from the responsible department is required for the conversion of a chassis into a tractor unit.
The frame longitudinal members shall be reinforced with a corresponding subframe.
The vehicle shall be equipped with anti-roll bars on the front and rear axle.

Warning note

Vehicles with ESC are not suitable for use as tractor units. Otherwise the ESC system in vehicles with ESC will no longer function correctly and will fail. This may result in the driver losing control of the vehicle and causing an accident.
A PR no. 1AC/1AN "Omission ESC" that is available as optional equipment is therefore absolutely necessary for use as a tractor unit.

8.10.1 Recommended optional equipment (PR no.) for conversion into a tractor unit

- PR nos. 1AC / 1AN: omission ESC
- PR no. 2J2: more powerful battery 12 V 100 Ah
- PR no. 8FD: additional battery 12 V 100 Ah
- PR no. UF3: terminal strip for additional consumers
- PR no. 1M5: trailer socket electrics

Information about available PR no. combinations is available from the commercial vehicle body builder support (see 2.1 "Product and vehicle information for body builders").
Furthermore we recommend using additional anti-roll bars as optional equipment to optimise the driving properties – depending on the type of semi-trailer.
Information about recommended optional equipment can be obtained from the responsible department (see 2.2 "Body builder guidelines, consulting").

8.10.2 Tractor unit assembly frame

A steel assembly frame made from rectangular tube, 100 x 60 x 3 (or s=4 mm), is required for usage as a tractor unit.
The length of the assembly frame shall run from the standard chassis end to the first body bracket behind the cab.
The assembly frame shall be attached using at least all the body brackets fitted at the factory as described in 8.1.4 "Attachment to the frame".
In addition, a shear-resistant connection of the frame and assembly frame is required at the end of the frame. This should be done on the upper chord of the frame longitudinal member (see 8.1.4 "Attachment to the frame").
A further shear-resistant connection shall be created in the front area of the frame longitudinal member.

8.10.3 Electrical connection for semi-trailers

All additional electrical equipment shall be connected as described in chapter 6.4 "Interfaces" and chapter 6.4.6 "Retrofitting electrical devices".

- The connecting cables shall not rub against body parts.
- The clearance during cornering shall be guaranteed by the body builder.
- The connecting cables shall not get caught on the semi-trailer and pull on the trailer socket.
- The connecting cables shall be secured properly when the vehicle is driven without the semi-trailer.

8.10.4 Brake system

The brake system of the semi-trailer shall be connected to the tractor unit. The use of overrun brakes is not permitted.
Before a safety certificate can be issued by the responsible department (see 2.2 "Body builder guidelines, consulting"), the body builder shall ensure:

- The brake system of the tractor unit, the semi-trailer, the compressed air supply and the compressed air storage shall be configured in accordance with EC Directive 71/320/EEC or ECE Regulation ECE R 13.
- A hydraulic/pneumatic control valve needs to be installed in the vehicle brake system for operating the semi-trailer brakes.

Practical note

The brake system of the tractor unit with corresponding power supply shall be configured in accordance with EC Directive 71/320/EEC or ECE Regulation ECE-R 13.
The semi-trailer manufacturer and the body builder are responsible for correct functioning of the semi-trailer brakes.

8.10.5 Mounting plate and semi-trailer coupling

Sufficient dimensioning of mounting plate and semi-trailer coupling shall be guaranteed by the body builder.
The national guidelines and laws must be observed (e.g. ECE Regulation ECE-R 55 and EC Directive 94/20/EC).
The manufacturer's information and assembly instructions for the mounting plate and the semi-trailer coupling shall be observed.

8.11 Rescue vehicles

Vehicles with bodies for rescue or transport purposes shall be attached via a sufficiently dimensioned assembly frame (see 8.11 “Attachment to the frame”).
In addition, these shall be supplemented with two shear-resistant connections per frame longitudinal member (see 8.1.4.3 “Shear-resistant connection”).
A safety certificate from the responsible department is required for the construction of rescue or towing vehicles.
Please also refer to 7.6.1 “Winch behind cab” for the attachment of winches.
Also refer to 7.6.8.2 “Side protection equipment” and 7.6.8 “Underbody guard”.

8.12 Torsionally stiff body types

The body and assembly frame for torsionally rigid superstructures (like municipal vehicles, fire brigade vans or road cleaning vehicles) shall be attached in the front area of the frame with bolted connections with spacer sleeves that are secured against loosening (see 8.1.4.4 “Bolted connection protected against loosening”).
At least all body brackets installed at the factory shall be used.
If necessary, the assembly frame shall be additionally reinforced in the rear area by using a diagonal cross.
Also note 6.4.6 “Retrofitting electrical devices”.
A safety certificate from the responsible department is required.

8.13 Campers

Information

For integral campers (see 8.17 “Partially integrated bodies”).

Before conversions into campers, observe the following:

- The legal regulations (EC directives) shall be observed.
- The minimum requirement for interior design and equipment for campers shall be fulfilled.

Information

It is possible to request appropriate information material for converting vehicles in the Federal Republic of Germany, from the responsible road traffic test centre (e.g. TÜV, DEKRA).

- To facilitate repair, accessibility to the components of the door mechanism (e.g. guide rails and hinges) shall be ensured.
- The standard tank cap is not allowed to be removed or covered with a part which creates a block.

Practical note

If the tank cap or parts placed on the tank cap are removed, blocking can occur in an accident. As a result, the survival space in the B-pillar can no longer function correctly. Covering with trim parts and securing “blocking” parts to the B-pillar is not permitted.

Attachment to the frame

- The body shall be attached to the base vehicle via at least all the body brackets fitted at the factory or via additional body brackets (see 8.1.4 "Attachment to the frame").
- Two screws shall be used on each body bracket to attach the body.

Practical note

The minimum distance between the rear edge of the door and integrated body shall be > 20 mm. Otherwise, in an accident, the rear edge of the door and the body could come into contact and in extreme cases result in the door being jammed.

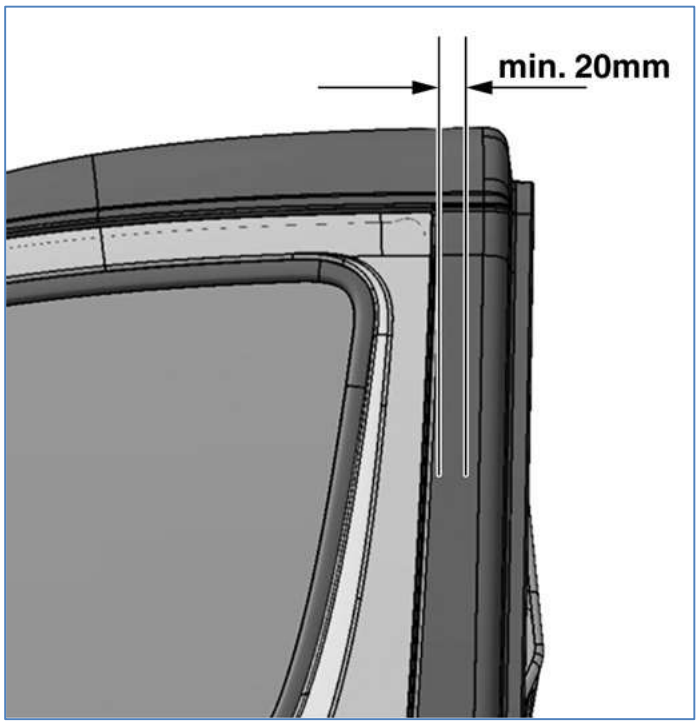

Minimum distance between rear edge of door and integrated body

The following sections of the body builder guidelines shall be observed in particular:

- 3.3 “Dimensions and weights“
- 4.2.4 “Gross axle weight ratings”
- 6 “Electrics/electronics”
- 6.16 “Rain/light sensor”
- 7 “Modifications to the base vehicle”
- 7.2.8 “Wings and wheel houses”

Modifying or converting standard vehicles (e.g. installation of a pop-up roof) could void the operating permit. The approval conditions and regulations of the European type approval (ETA) shall be complied with.
In Germany, vehicle modifications shall therefore be inspected by the responsible road traffic test centre in accordance with § 19 paragraph 2 of the StVZO.
The vehicle documents shall be presented for the test. Once the modifications have been entered in the vehicle documents, the vehicle documents shall be presented to the responsible test centre to issue a new operating permit.
At least one anti-roll is required on the front axle due to the higher centre of gravity.
We also recommend an anti-roll bar on the rear axle that is available as optional equipment PR no. GC5
(see 4.2 “Limit values for chassis”) from the factory, see also 4.2.12 “Minimum rear axle load with running gear for application D”.
You will find further information on electrics and ancillaries under 6 “Electrics/electronics” and 7.5 “Ancillaries”.

8.14 Elevated work platform

8.14.1 General information

Practical note

If a superstructure has moving attachments, make sure that there is sufficient clearance from the base vehicle, otherwise attachments could collide with the base vehicle causing damage.

Practical note

The elevated work platform may only be operated if the vehicle has been fully raised on outriggers.
There must be no additional loads in or on the cab while the vehicle is raised on its outriggers. Otherwise the frame could be damaged. The vehicle is not allowed to be moved if the elevated work platform has been raised. The frame could be damaged if the vehicle is moved while the elevated work platform is raised. The superstructure manufacturer shall install a safety mechanism so that the vehicle cannot be moved while the elevated work platform is raised. This can, for example, be done with the controls for the elevated work platform or in conjunction with the parametrisable special module (PSM) (see chapter 6.10 "Electrical interface for external use - parametrisable special module (PSM)").

If chassis are equipped with elevated work platforms, the following points shall be observed due to the high loads when the platform is raised:

- A safety certificate from the responsible department is required for the retrofitted elevated work platforms.
- The stability of the elevated work platform shall be guaranteed by the body builder.
- The body builder shall produce an additional operating manual for the lifting system and enclose it with the vehicle. The operating manual shall contain the warning that there shall be no persons or loads in the cab while the vehicle is raised on its outriggers.
- For an even load on the chassis frame, the body shall be mounted using an assembly frame.
- At least all of the body brackets provided at the factory shall be attached to the assembly frame.
- In the area behind the cab, an additional body bracket needs to be fitted for each frame longitudinal member (see example illustration).
- The attachment to the first and the additional brackets shall be done with bolted connections with spacer sleeves that are secured against loosening (see 8.1.4.4 "Bolted connection protected against loosening").
- The force induction from the supports shall be central between the two standard double bracket pairs behind the cab. In addition, the assembly frame needs to be protected sufficiently against torsion in the force induction area.

8.14.2 Required additional body brackets

For even force induction into the chassis frame, an additional body bracket is required in the area behind the cab for each frame longitudinal member.

The body brackets shall have at least the quality of the standard material H240LA and a wall thickness of 3 mm.

The hole spacing between the additional body bracket and the neighbouring hole of the existing body bracket shall be 100 mm.

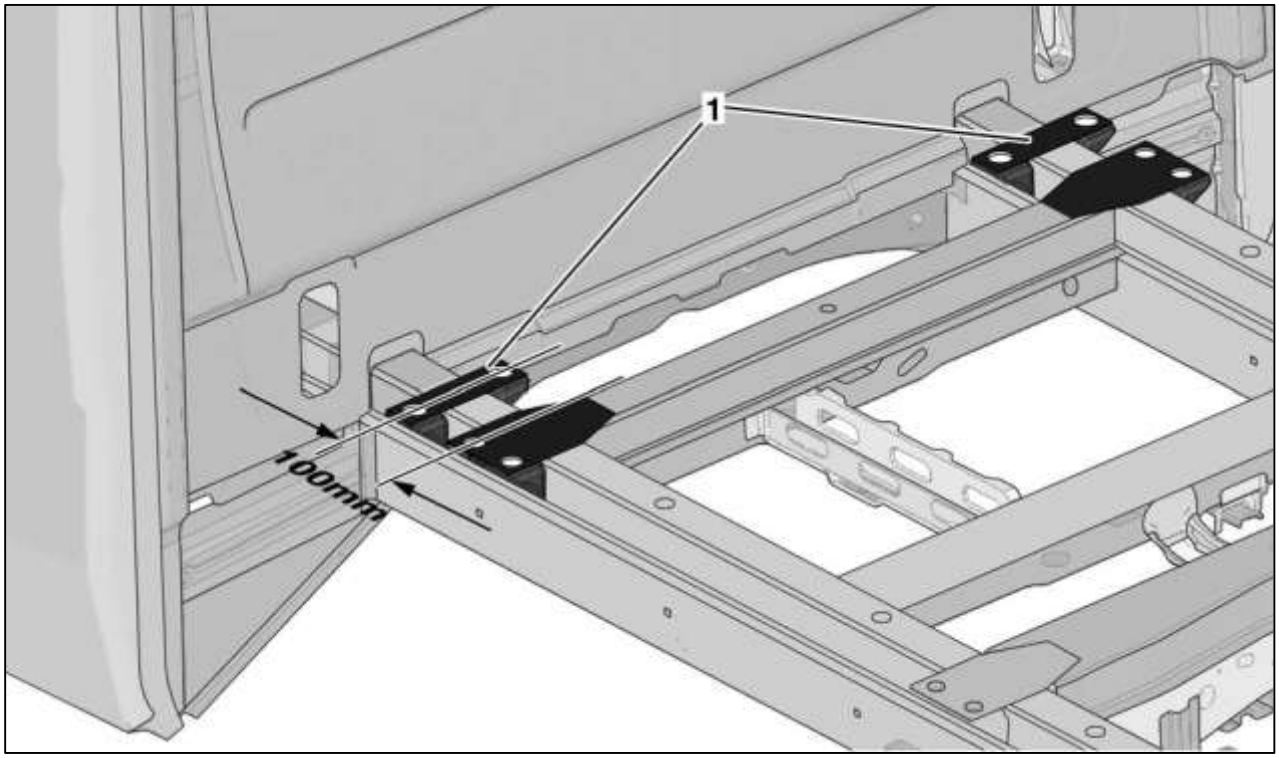

Body brackets

[1] Additional body brackets

We recommend using genuine Volkswagen parts when fitting additional body brackets.

For more information on the standard positions and the dimensions of the body brackets see 2.1 “Product and vehicle information for body builders” and 8.1.4 “Attachment to the frame”.

Assembly frame

A sufficiently dimensioned assembly frame is required for the installation of elevated work platforms on chassis.

See 8.1 "Assembly frame" for section moduli (W_X) and material properties.

The assembly frame shall be attached uniformly to all body brackets. The attachment of the assembly frame to the first and the additional brackets shall be done with bolted connections with spacer sleeves that are secured against loosening (see 8.1.4.4 "Bolted connection protected against loosening").
The force induction from the outriggers into the assembly frame shall be central between the two standard double bracket pairs behind the cab.
In the area of force induction into the assembly frame from the outriggers, a sturdy cross member (front and rear) shall protect the assembly frame sufficiently against torsion.

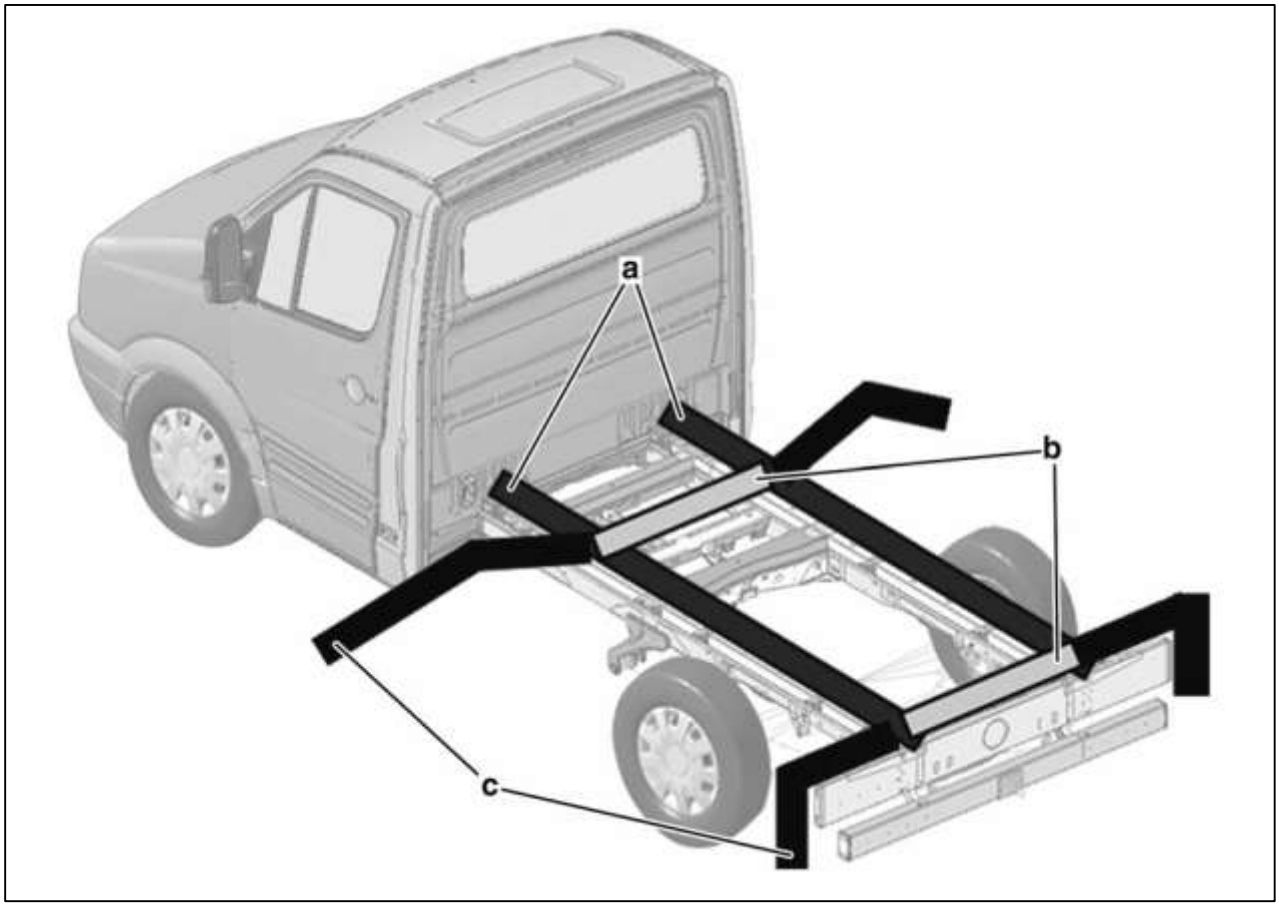

Illustration: Assembly frame on body brackets

a Area of additional brackets

b Required assembly frame cross member in area of outrigger load induction

c Outriggers

8.15 Bodies on chassis with lowered roof

For partially integrated bodies or alcove bodies, a cowl panel with lowered cab roof (PR no. F0E/ZW4) is available from the factory as a basic vehicle. The PR no. F0E/ZW4 covers the following modifications compared with the standard version:

- The roof height is reduced by approx. 70 mm.
- The vehicle is cut in the area of the roof/door frame, reinforced with body-in-white adjustments and then painted in the area of the body-in-white adjustments.
- The standard sun visors and grab handles are fitted in the same position to modified mounting points.
- The roof trim can be fitted to the previous mounting points, but shall be custom cut by the body builder in the front and side area and be adapted to the installed interior.
- The vehicle is equipped with a transport cross strut for vehicle transportation.
- Before building the body, the supplied roof subframe shall be fitted at the provided connection points by the body builder to ensure sufficient replacement rigidity. This provides a lowered connecting level for bodies.
- The body limits for camera-based assistance systems shall be observed (see 8.9.6 "Rain/light sensor").

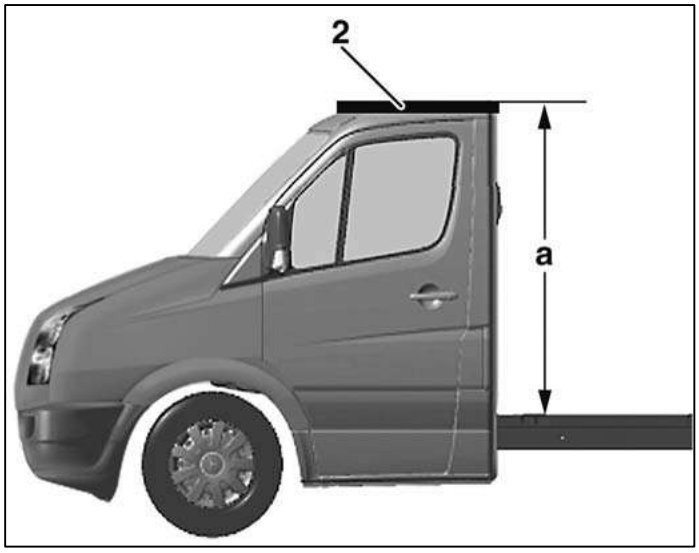

Position of roof subframe

2 roof subframe

a Distance between upper edge of frame longitudinal member and upper edge of roof subframe:

Chassis with GVWR	Distance a [mm]
3.5 t	1556
5 t	1536

8.15.1 Installing the roof subframe

The transport cross strut (1) shall be removed before the roof subframe (2) is installed.
The roof subframe (2) shall then be attached at the provided points using six M10 x 20 10.9 hexalobular bolts (tightening torque 40 Nm +/- 2 Nm).

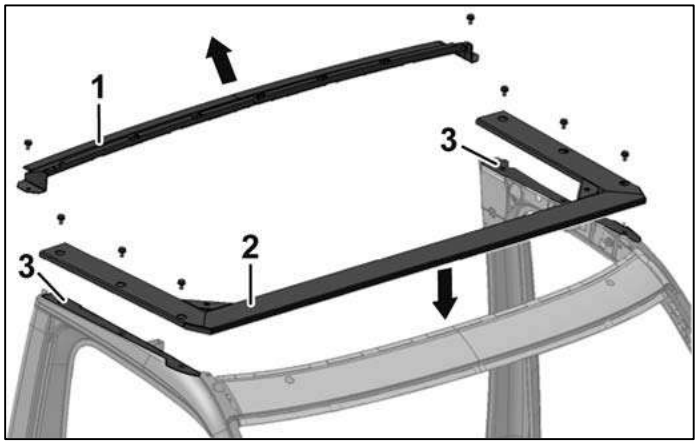

Installation of roof subframe

[1] Transport cross struts

[2] Roof subframe

[3] Cutting area with reinforcements (body-in-white adjustments)

8.15.2 Mounting the body on the roof subframe

The body can be attached to the roof subframe by means of:

- Bolts and screws
- Rivets
- Sticking
- Welding

Practical note

Drilling is not allowed in the corners of the roof subframe.
The roof subframe is not allowed to be cut away.
The force induction into the roof subframe shall occur via a distributed load (knife-edge load). The force induction into the roof subframe shall not be at individual points.
The load on the roof subframe is allowed to be 100 kg maximum in driving operation. A load of 200 kg is permitted when the vehicle is stationary.

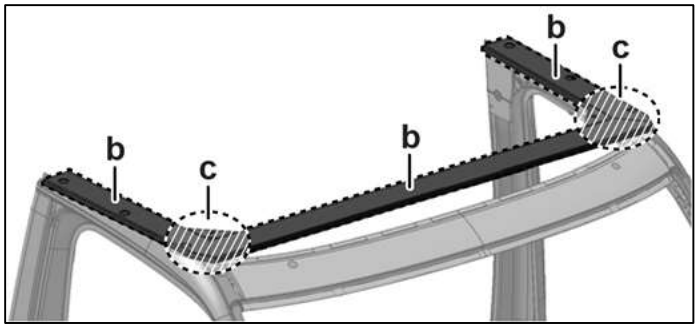

Connecting areas of roof subframe on vehicles with lowered roof

b Connecting area

c No drilling permitted

Also note chapter 5.3 “Corrosion protection measures”. Please contact your responsible department if you have questions (see 2.1 “Product and vehicle information for body builders”).

8.16 Partially integrated bodies

On vehicles with partially integrated bodies, e.g. partially integrated campers, integrated boxes etc., a force-locking connection between the cab and body is required.

8.16.1 Connecting cab rear wall to B-pillar (z-axis)

The body sidewall shall always be connected to the B-pillar. The connection between the body and base vehicle shall be force-locking.

The transfer of forces between the body and B-pillar shall be ensured. This can, for example, be done with:

Variant 1

Connection of body to the B-pillar via a body flange with t = 2 mm angled at approx. 2 x 45°. The body flange shall be connected by bonding over the whole area.

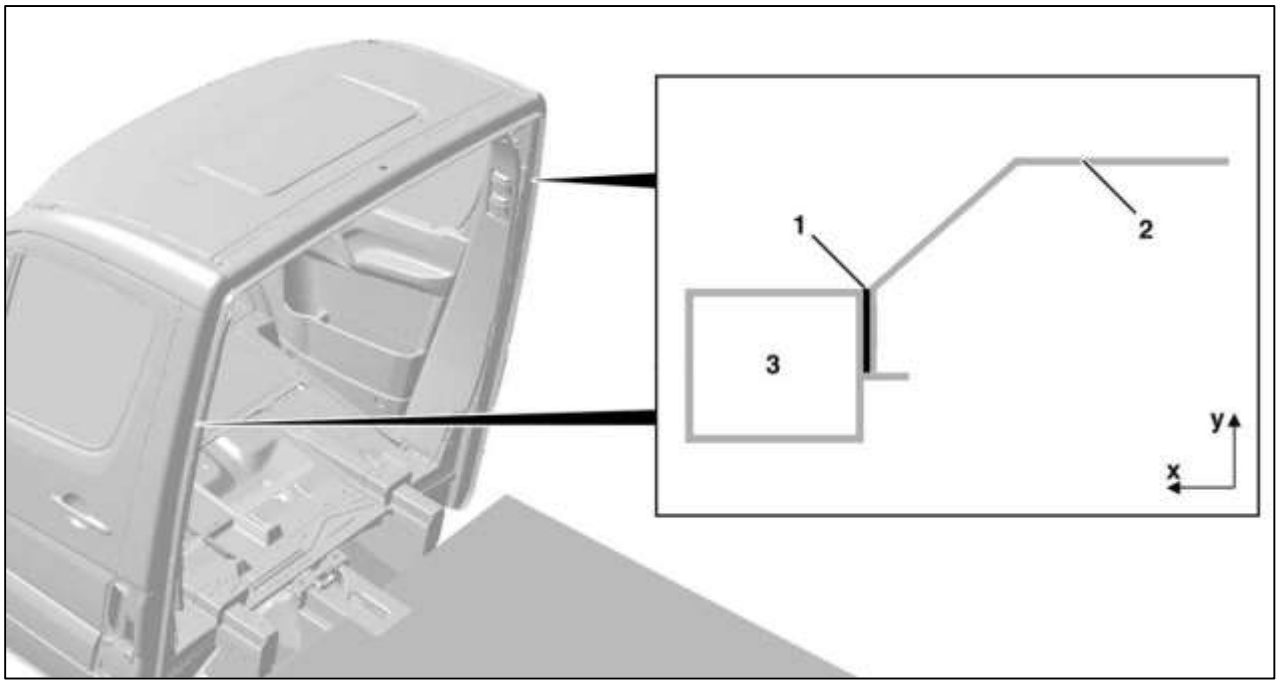

Variant 1: Connection of body to B-pillar via body flange

[1] Bonding flange

[2] Body flange

[3] B-pillar

Variant 2

The body shall be connected to the welding flange on the B-pillar using brackets.

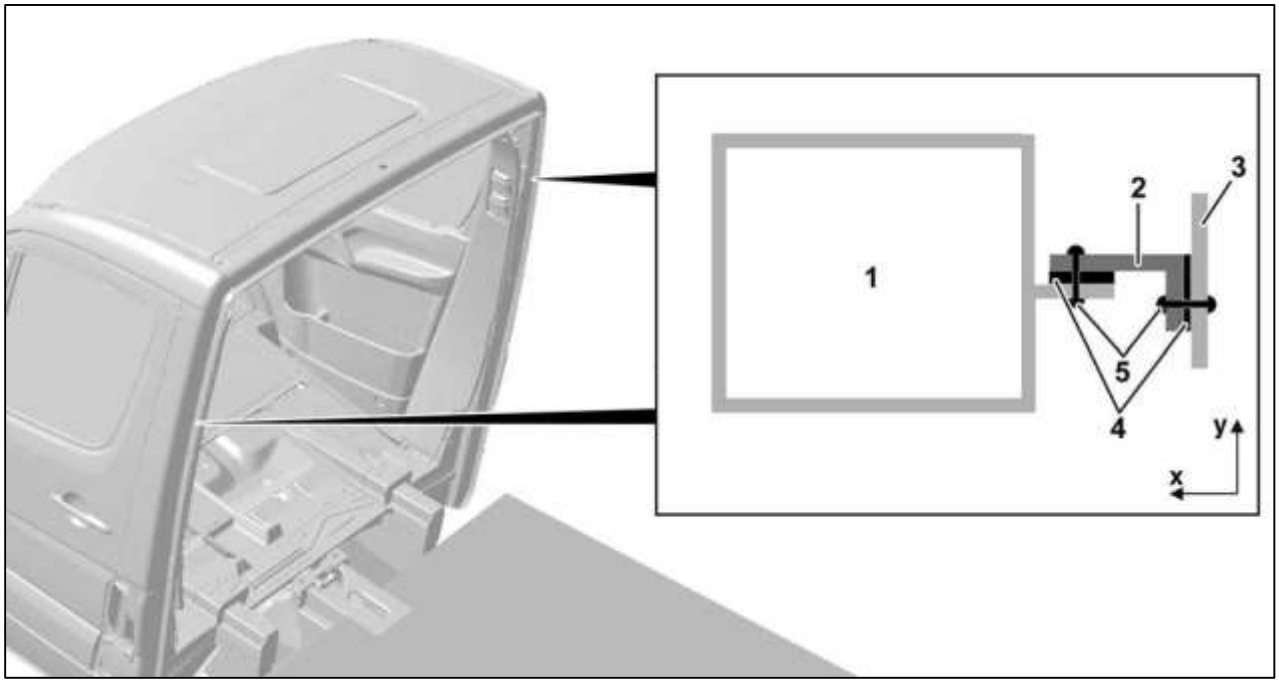

Connection of body to welding flange on B-pillar via brackets

[1] B-pillar

[2] Bracket

[3] Rear wall of body

[4] Bonding flange

[5] Rivet

8.16.2 Connecting cab rear wall to B-pillar roof cross strut (y-axis)

In addition to the required connection between the body sidewall and the base vehicle, a force-locking connection between the body and base vehicle is also required in the area of the roof frame for integrated bodies. This can, for example, be done with:

Variant 1

Connection of body to the roof frame via a body flange with t = 2 mm angled at approx. 2 x 45°. The body flange shall be connected by bonding over the whole area.

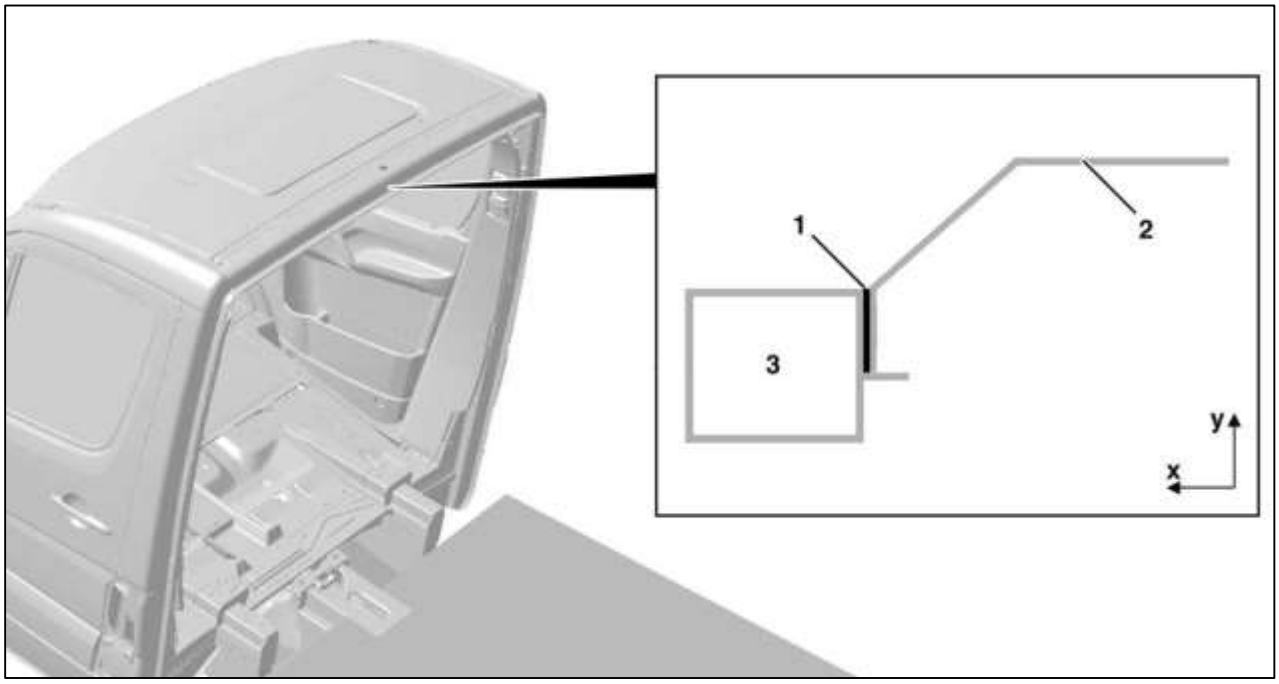

Variant 1: Connection of body to roof frame via body flange

[1] Bonding flange

[2] Body flange

[3] Roof frame

Variant 2

Connection of the body to the welding flange on the roof frame using brackets.

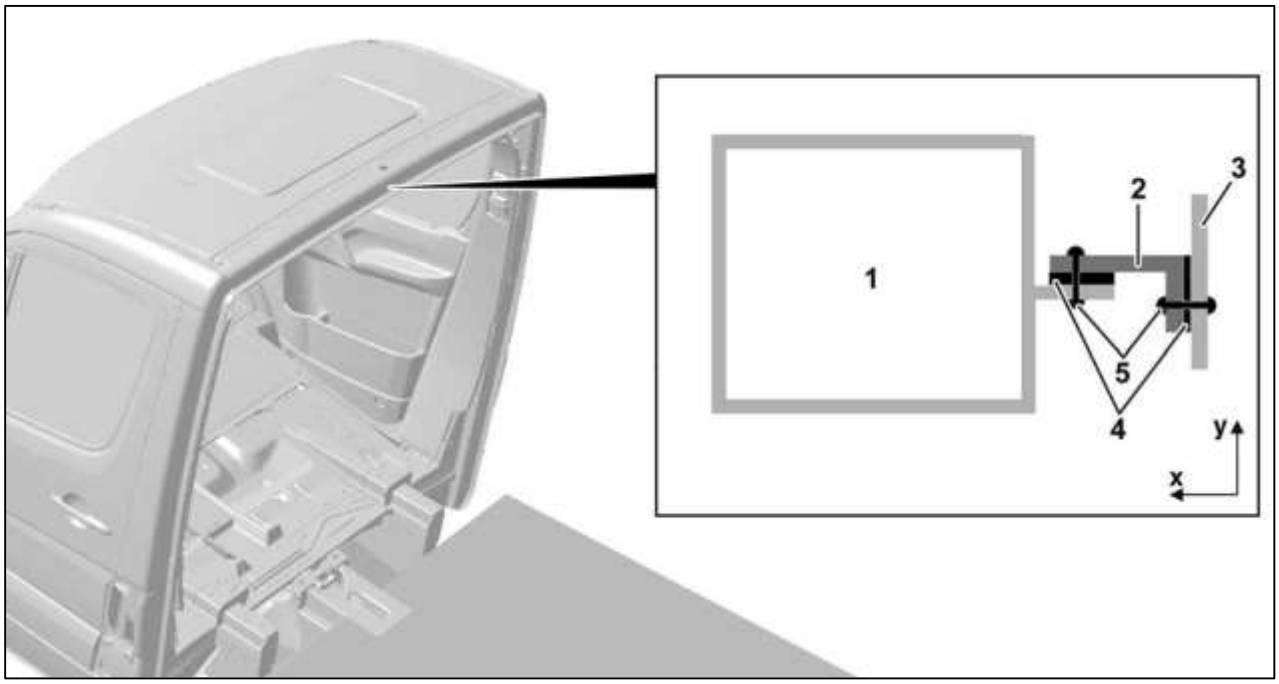

Variant 2: Connection of body to welding flange on B-pillar roof cross strut via brackets

[1] Roof frame

[2] Bracket

[3] Rear wall of body

[4] Bonding flange

[5] Rivet

On vehicles with cut roof frame, force transfer to the replacement structure shall be ensured by the body builder (see 7.2.12 “Cutting cab roof and B-pillar roof cross strut”). A safety certificate from the responsible department is required for this.

9 Calculations

9.1 Determining the centre of gravity

The overall centre of gravity height (vehicle with add-ons or complete body without load) should be kept as low as possible.
The centre of gravity in the vehicle longitudinal direction is given in relation to a vehicle axle.
The centre of gravity height is related to the centre of the wheel hub or related to the road.
Volkswagen recommends having the centre of gravity determined by a recognised test institution with experience in this field (e.g. DEKRA, TÜV or others). You can obtain support from the responsible department (see 2.1 "Product and vehicle information for body builders").
For the body builder to determine the centre of gravity, we recommend complying with the procedure described under 9.1.1 "Determining the centre of gravity in x-direction" and 9.1.2 "Determining the centre of gravity in z-direction" and using personnel with the corresponding qualifications to obtain realistic, usable results.

9.1.1 Determining the centre of gravity in x-direction

Centre of gravity coordinates in x-direction (axle load distribution FA/RA)

Procedure:
- The vehicle must be weighed with the add-ons or complete body without load.
- Inflate the tyres up to the tyre pressure that is specified for the respective gross axle weight rating.
- Completely fill all fluid containers (fuel tank, washer fluid reservoir, if applicable, hydraulic tank, water tank etc.).
- Drive the vehicle onto the scales, switch off the engine, shift the gearbox to neutral and release the brakes.
- The vehicle must be standing horizontal and level for weighing.
- First weigh the individual axle loads (front and rear axle load) and then the gross weight of the vehicle.
- The measured values can be used to calculate the position of the centre of gravity in the vehicle longitudinal direction with the equations (3) and (4).
- The equation (2) should be used to check the results of (3) and (4).

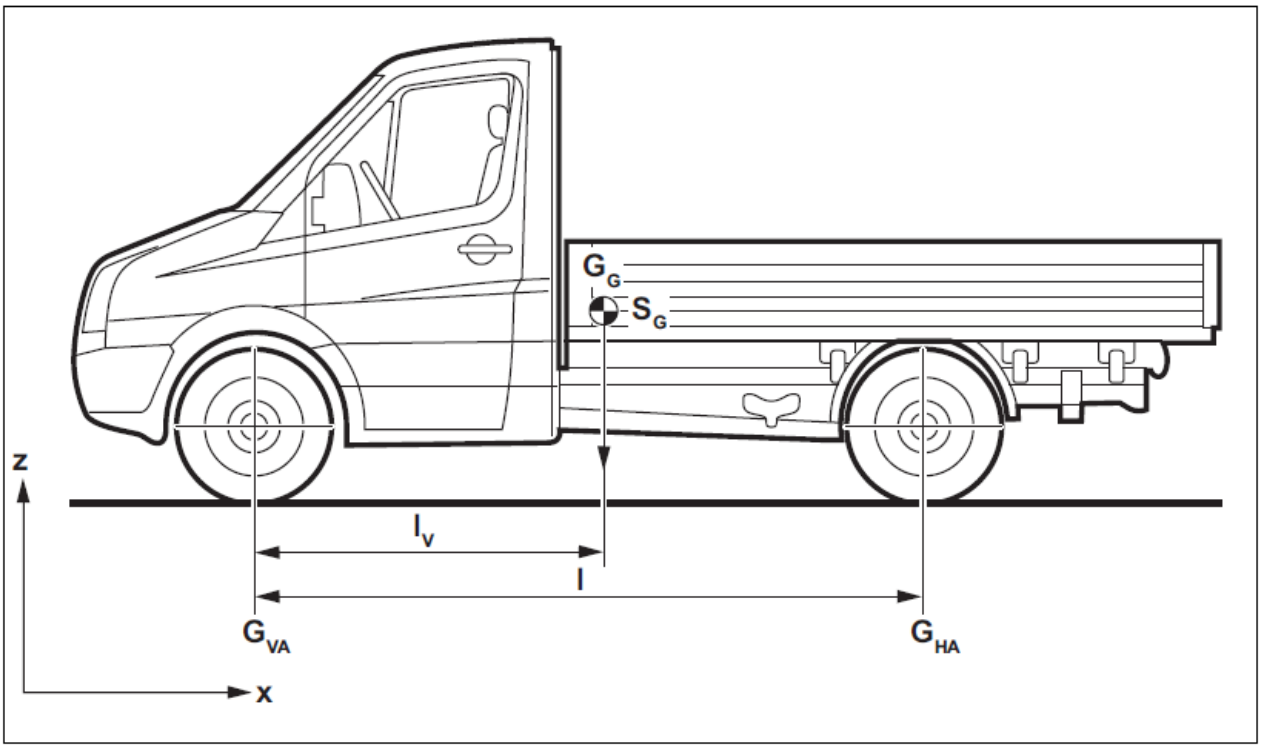

Illustration: axle load calculation

Determining the total weight of the unladen vehicle with add-ons and body.

$$G_G = G_{HA} + G_{VA} \quad (1)$$

Calculating the position of the overall centre of gravity S_G in x - direction:

$$l = l_V + l_H \quad (2)$$

$$l_V = \frac{G_{HA} \times l}{G_G} \quad (3)$$

$$l_H = \frac{G_{VA} \times l}{G_G} \quad (4)$$

Abbreviations and parameters used:

G_G	-	Total weight of unladen vehicle
G_{VA}	-	Front axle load of unladen vehicle (specification or weighing of respective chassis).
G_{HA}	-	Rear axle load of unladen vehicle (specification or weighing of respective chassis)
l	-	Wheelbase
l_V	-	Distance from the overall centre of gravity of the empty vehicle to the front axle.
l_H	-	Distance from the overall centre of gravity of the empty vehicle to the rear axle.
S_G	-	Overall centre of gravity

Practical note

The practical determination of the centre of gravity height may only be performed by appropriately qualified personnel with the help of suitable and calibrated scales.

To reduce measuring errors, each measured value should be calculated at least three times and an average value calculated from the three results. This value is then used for calculating in accordance with the equations (3) and (4).

Information

The wheelbase "l" is defined by the vehicle prototype (see order) or shall be defined by measuring the length in accordance with DIN 70020, part 1.

9.1.2 Determining the centre of gravity in z-direction

Centre of gravity coordinates in z-direction (centre of gravity height hS for the whole vehicle)

So that the body builder can determine the total vehicle centre of gravity height h_S, Volkswagen AG recommends the following procedure after completion of the whole vehicle:

- After conversion, the vehicle should be weighed on board scales or on suitable wheel load scales in two subsequent driving positions.
- Here, the measured axle loads shall be determined with the vehicle in a level state (G_{FA} and G_{RA} (see 9.1.1 "Determining the centre of gravity in x-direction") and the axle loads on an axle (Q_{RA} or Q_{FA}) increased by the quantity h'.
  The raising height h' should be as large as possible in accordance with the front and rear overhang angles of the vehicle (also known as entry or exit angles). The target value is h' > 600 mm.
- To reduce measuring errors, at least six individual measurements shall be made in the axle load calculation for each vehicle axle:
- three per axle with vehicle level and
- three each with a raised axle.
- The average value for each axle should be calculated from the three measurements for a state.
- The average value should be calculated from these three values and used in the calculations with the equations (5) to (9). To improve the accuracy of the final result, the axle load modification should be determined with raised rear axle and raised front axle.

Practical note

Observe the following to avoid incorrect measurements:

- The vehicle must be standing perfectly horizontal for weighing in level vehicle state. Height differences between the axles caused by scales should be compensated accordingly.
- When raising to the required lifting height, the axle being weighed should be locked to prevent suspension compression or extension.
- When raising to the required lifting height, no part of the vehicle may touch the ground.
- All vehicle wheels must be able to rotate freely: select neutral, release all brakes including handbrake and place chocks at sufficient distance from the wheels, if necessary.
- Move vehicle with own power (to weigh the respective other vehicle axle) to relieve any tension in the vehicle.
- Ensure that no objects inside the vehicle can move during the measurements.

If the vehicle suspension cannot be locked due to the body or available space, further axle load measurements must be carried out at different levels (for example, 600 mm, 700 mm and 800 mm). This also allows errors to be limited by averaging. The centre of gravity height results from the arithmetic average of the individual centre of gravity heights for each raising height.

Example of procedure:

1. The vehicle must be weighed with the add-ons or complete body without load.
2. Inflate the tyres up to the tyre pressure that is specified for the respective gross axle weight rating.
3. Completely fill all fluid containers (fuel tank, washer fluid reservoir, if applicable, hydraulic tank, water tank etc.).
4. On the scales, switch off the engine, set gearbox to neutral and release the brakes.
5. Position the vehicle with the rear axle (RA) horizontal and level on the scales and measure the axle load.
6. Raise the front axle by the value h′, at least 600 mm. A greater height h′ taking the other vehicle-related conditions into consideration is more favourable for the final result. The value h' must be measured for all individual measurements with raised axle and should be as identical as possible. Alternatively to the raised height h', the angle α between the wheel hubs can be defined.
7. Determine the axle load displacement QHA that occurs at the rear axle on the scales.
8. Lower and turn the vehicle around and perform the corresponding measurements on the front axle (first GFA with level and then QFA with the rear axle raised by h').
9. Perform steps 4 to 7 a total of three times (with locked suspension).
10. The measured values can be used to calculate the height of the centre of gravity with the equations (5) to (9).
11. In the calculations using the equations (3) to (9), all length measurements should be in millimetres (mm) and all weight figures in decanewton (1.daN = 10 N).
12. Raise the raised axle further (by e.g. 100 mm) and measure the height of the centre of gravity again to confirm the measuring result.

Practical note

The practical determination of the centre of gravity height may only be performed by appropriately qualified personnel with the help of suitable and calibrated measuring systems and measuring tools.

* G = 1 daN = 10 N is the weight force that corresponds to the mass m = 1 kg.

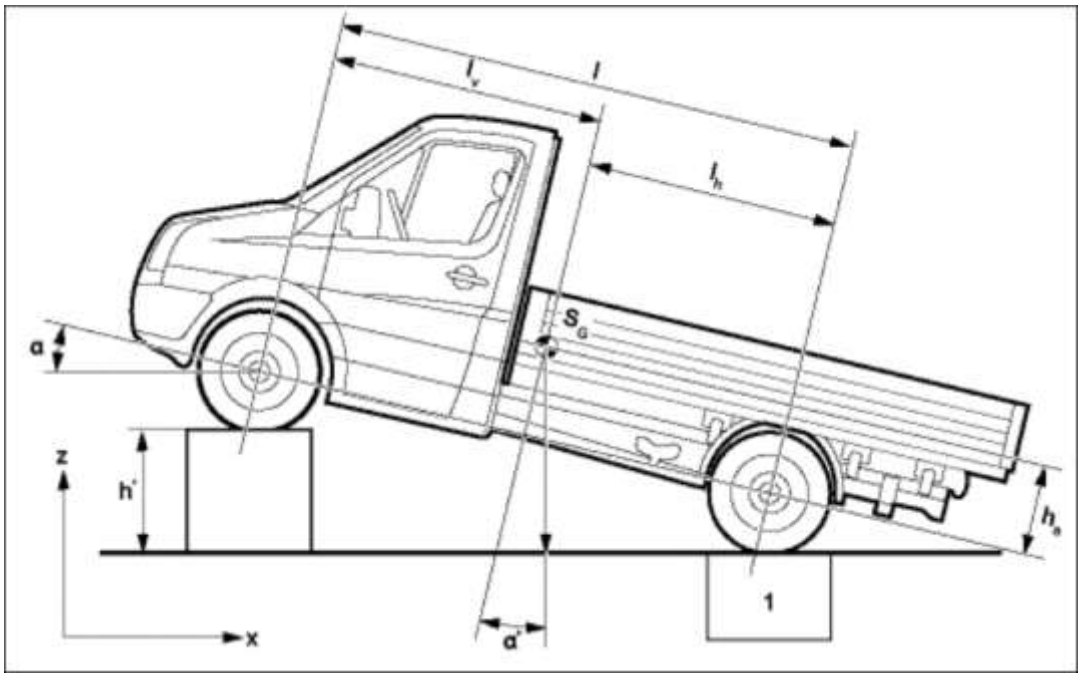

Determining the height of the centre of gravity

Determining the overall centre of gravity S_G in z-direction:

$$h_S = h_a + r_{stat} \quad (5)$$

Determining the overall centre of gravity S_G in z-direction for the raised front axle:

$$h_S = \left(\frac{Q_{HA} - G_{HA}}{G_G} \times l \times \frac{1}{\tan\alpha}\right) + r_{stat} \quad (6)$$

$$\sin\alpha = \frac{h'}{l} \quad (6a)$$

$$\alpha = \arcsin\left(\frac{h'}{l}\right) \quad (6b)$$

$$h_S = \left(\frac{1}{h'} \times \frac{Q_{HA} - G_{HA}}{G_G} \times \sqrt{l^2 - h'^2}\right) + r_{stat} \quad (7)$$

Determining the overall centre of gravity S_G in z-direction for the raised rear axle:

$$h_S = \left(\frac{Q_{VA} - G_{VA}}{G_G} \times l \times \frac{1}{\tan\alpha}\right) + r_{stat} \quad (8)$$

$$\sin\alpha = \frac{h'}{l} \quad (8a)$$

$$\alpha = \arcsin\left(\frac{h'}{l}\right) \quad (8b)$$

$$h_S = \left(\frac{1}{h'} \times \frac{Q_{VA} - G_{VA}}{G_G} \times \sqrt{l^2 - h'^2}\right) + r_{stat} \quad (9)$$

Abbreviations and parameters used:

r_{stat}	-	Static tyre radius
Q_{VA}	-	Front axle load when vehicle raised at rear
Q_{HA}	-	Rear axle load when vehicle raised at front
G_G	-	Total weight of unladen vehicle
G_{VA}	-	Front axle load of unladen vehicle (specification or weighing of respective chassis).
G_{HA}	-	Rear axle load of unladen vehicle (specification or weighing of respective chassis)
l	-	Wheelbase
l_V	-	Distance from the overall centre of gravity of the empty vehicle to the front axle.
l_H	-	Distance from the overall centre of gravity of the empty vehicle to the rear axle.
h_S	-	Centre of gravity height over road
h_a	-	Centre of gravity height over centre of wheel
h'	-	Height by which the vehicle has been raised
1	-	Weighing equipment

Information

The wheelbase "l" is defined by the vehicle prototype (see order) or shall be defined by measuring the length in accordance with DIN 70020, part 1.

Practical note

The measured centre of gravity shall not exceed the limit values named in 4.1.2 "Maximum permitted centre of gravity".

9.2 Positioning semi-trailer coupling

9.2.1 Calculating position of semi-trailer coupling

Information

For information on conversions into tractor units see 8.10 “Tractor units”.

9.2.2 D value semi-trailer coupling

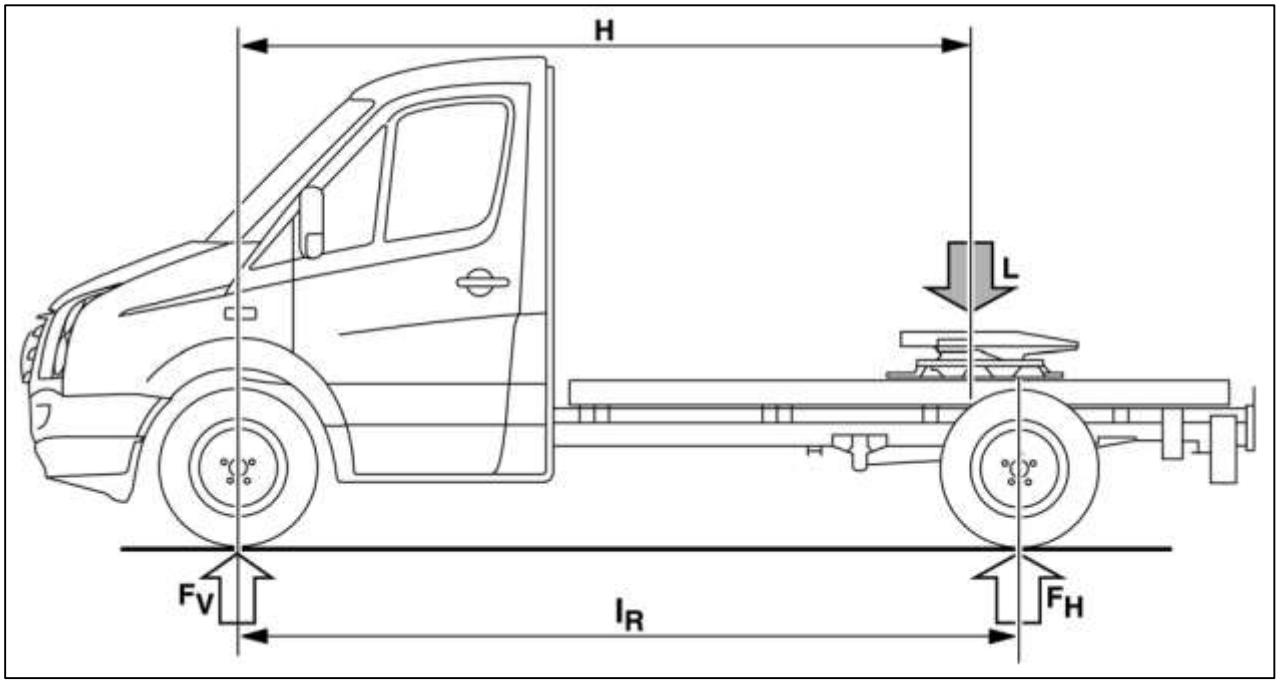

Illustration: Calculating D value of semi-trailer coupling

$$D = \frac{0{,}6 \times 9{,}81 \times Z \times A}{Z + A - L}$$

A	gross vehicle weight rating of semi-trailer
D	D-value of coupling
FH	max. gross rear axle weight rating
FHL	rear axle load empty vehicle
FH*	resulting max. rear axle load
H	distance between front axle/semi-trailer coupling
IR	wheelbase
L	max. semi-trailer load
Z	gross vehicle weight rating of tractor vehicle

The permitted axle loads on the front and rear axles shall be observed.
In order not to exceed the maximum axle loads, the position of the semi-trailer coupling shall be calculated as follows:

$$H = \frac{F_{H*} \times l_R}{L}$$

$$F_{H*} = F_H - F_{HL}$$

$$L = Z + A - \frac{0{,}6 \times 9{,}81 \times Z \times A}{D}$$

10 Technical data

10.1 Signal recording and control unit (SAM)

Function	Equipment		SAM_{Min}	SAM_{Low}	SAM_{Med}	SAM_{High}
	Series	Optional extra				
Exterior light control system with bulb monitoring	X		X	X	X	X
Third brake light		X		X	X	X
Fog lights		X			X	X
Turn signal actuation	X		X	X	X	X
Interior lighting control	X		X	X	X	X
Interior convenience light						X
Windscreen wiper and washer system	X		X	X	X	X
Rear window wiper and washer system		X			X	X
Windscreen heater		X				X
Rear window heating		X			X	X
Central locking: sliding door, rear pivoting door		X		X	X	X
Central locking: second sliding door		X			X	X
Rotary light switch input	X		X	X	X	X

Function	**Equipment**		**SAM_{Min}**	**SAM_{Low}**	**SAM_{Med}**	**SAM_{High}**
	Series	**Optional extra**				
Reading sensor signals (incl. washer fluid level, coolant level, brake fluid level, tank sender, outside temperature and brake pad wear) and switches	X		X	X	X	X
Electric vent windows		X				X
Headlight washer system		X			X	X
Auxiliary turn signal module		X			X	X
Alarm function		X	X	X	X	X
EDW function		X			X	X
Central locking front passenger door	X		X	X	X	X
Window regulator front passenger door	X		X	X	X	X
Motion sensors		X			X	X
Adaptive brake light		X	X	X	X	X
Reading bonnet switch		X	X	X	X	X
PWM activation of the exterior lighting		X	X	X	X	X
Fog lights with turning lights		X			X	X
Separate daytime running lights	X		X	X	X	X

Not all functions are available in all control unit versions. Depending on the equipment, only "basic" versions of the SAM or door control unit are fitted, for example. Then the corresponding control unit may need to be retrofitted.

10.2 Bulb ratings for exterior lights

Pin	Function	Type	Wattage [W]	Remark
FL_L	Left main beam	H7	55	
FL_R	Right main beam	H7	55	
NSW_L	Left front fog light	HB4	51	Fog light in bumper
NSW_R	Right fog light	HB4	51	Fog light in bumper
NSW_L	Left front fog light	HB4	51	Fog light in bumper, Cornering lighting
NSW_R	Right fog light	HB4	51	Fog light in bumper, Cornering lighting
ABL_L	Left dipped beam	H7	55	
ABL_R	Right dipped beam	H7	55	
STL_L	Left side light	W5W	5	
STL_R	Right side light	W5W	5	
SL_L	Left tail light	R21/5W	5	On panel van and window van
		R21/5W	2 x 5	Two parallel lights on cab, double cab and chassis
SL_R	Right tail light	R21/5W	5	On panel van and window van
		R21/5W	2 x 5	Two parallel lights on cab, double cab and chassis
BR_L	Left brake light	P21	21	For SAE in conjunction with cab, double cab, chassis and also rear left turn signal function
BR_R	Right brake light	P21	21	For SAE in conjunction with cab, double cab, chassis and also rear right turn signal function
BR_3	Third brake light	LED	Approx. 1.8	LED light
RFL	Rear fog light	P21	21	
KZB	Number plate light	C5W	2 x 5	On panel van and window van, two parallel lights
	Rear end-outline marker lamp	R21/5W	2 x 5	Two parallel lights on chassis vehicles
RFL	Reversing light	P21	2 x 21	Two parallel lights, optional parallel warning buzzer

Pin	Function	Type	Wattage [W]	Remark
BL_L	Left turn signal	PY21	Front 21	Rest of the world
		HPV16	Side 16	
		PY21	Rear 21	
A_TFL_L	Left daytime running light/position light	W21/5W	21 / 5	Optional daytime running light
A_TFL_R	Left daytime running light/position light	W21/5W	21 / 5	Optional daytime running light
BL_R	Right turn signal	PY21	Front 21	Rest of the world
		HPV16	Side 16	
		PY21	Rear 21	
BL_L	Left turn signal	PY21	Front 21	ROW (heavy-duty suspension version)
		PY21	Side 21	
		PY21	Rear 21	
BL_R	Right turn signal	PY21	Front 21	ROW (heavy-duty suspension version)
		PY21	Side 21	
		PY21	Rear 21	
BL_L	Left turn signal	3457NAK	Front 28.6	Only for SAE
		HPV16	Side 16	
		PY21	Rear 21	
BL_R	Right turn signal	3457NAK	Front 28.6	Only for SAE
		HPV16	Side 16	
		PY21	Rear 21	
URL	Front end-outline marker lamp	W5W	2 x 5	Two parallel lights
SM_L	Left side marker light	W3W	2 x 3	Two parallel lights
SM_R	Right side marking light	W3W	2 x 3	Two parallel lights
TSG_L	Left entry light	W5W	5	
TSG_R	Right entry light	W5W	5	

Information

You will find information on connectors/mating plug contacts on the base vehicle in 2.2.3 “Electronic repair and workshop information of Volkswagen AG (erWin)*”.

10.3 Hole patterns for towing bracket

If a towing bracket is fitted, reinforcements are not required on the bolt-on point of the towing bracket carrier.

10.3.1 Fitting dimensions for type 1

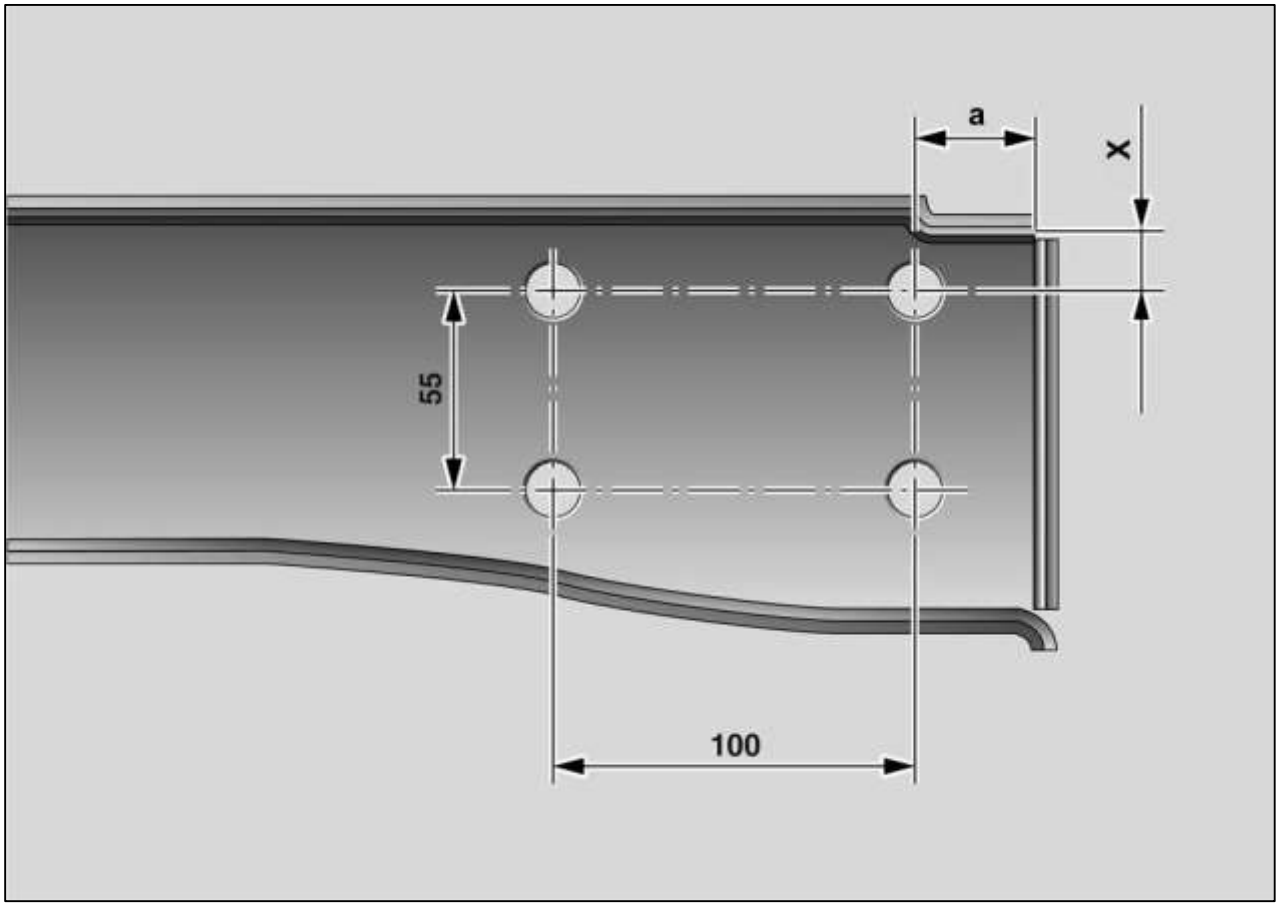

Vehicle type	Wheelbase	Dimension a	Dimension x	Overhang dimension
Panel van/window van 3.0 t to 5.0 t	3,250 mm	35 mm	26 mm	950 mm
	3,665 mm	35 mm	26 mm	1,150 mm
	4,325 mm	35 mm	26 mm	1,250 mm

10.3.2 Fitting dimensions for type 2

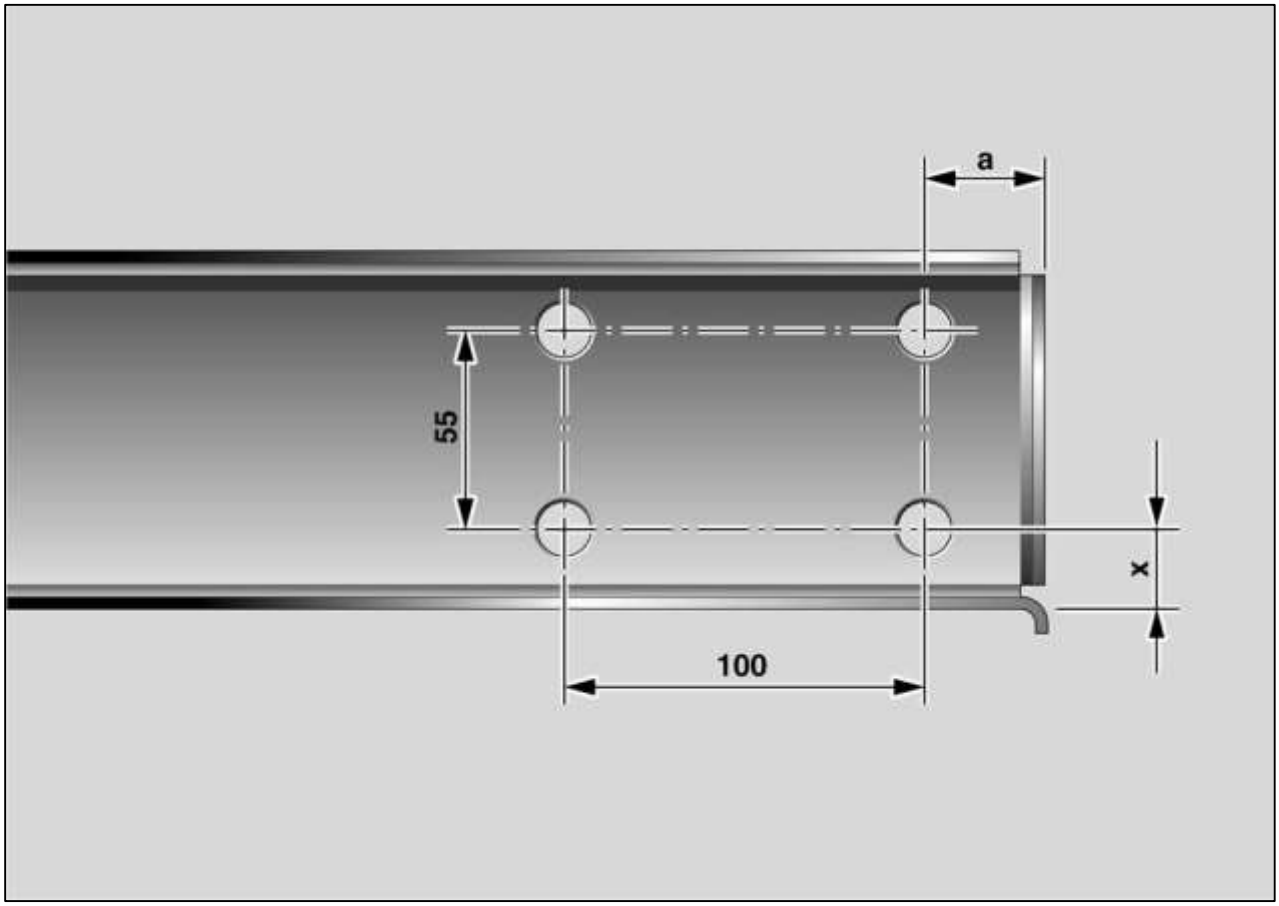

Vehicle type	Wheelbase	Dimension a	Dimension x	Overhang dimension
Chassis/platform/tipper with cab/with double cab 3.0 t to 3.5 t	3,250 mm	34 mm	39 mm	950 mm
	3,665 mm	34 mm	39 mm	1,150 mm
	4,325 mm	34 mm	39 mm	1,250 mm

10.3.3 Fitting dimensions for type 3

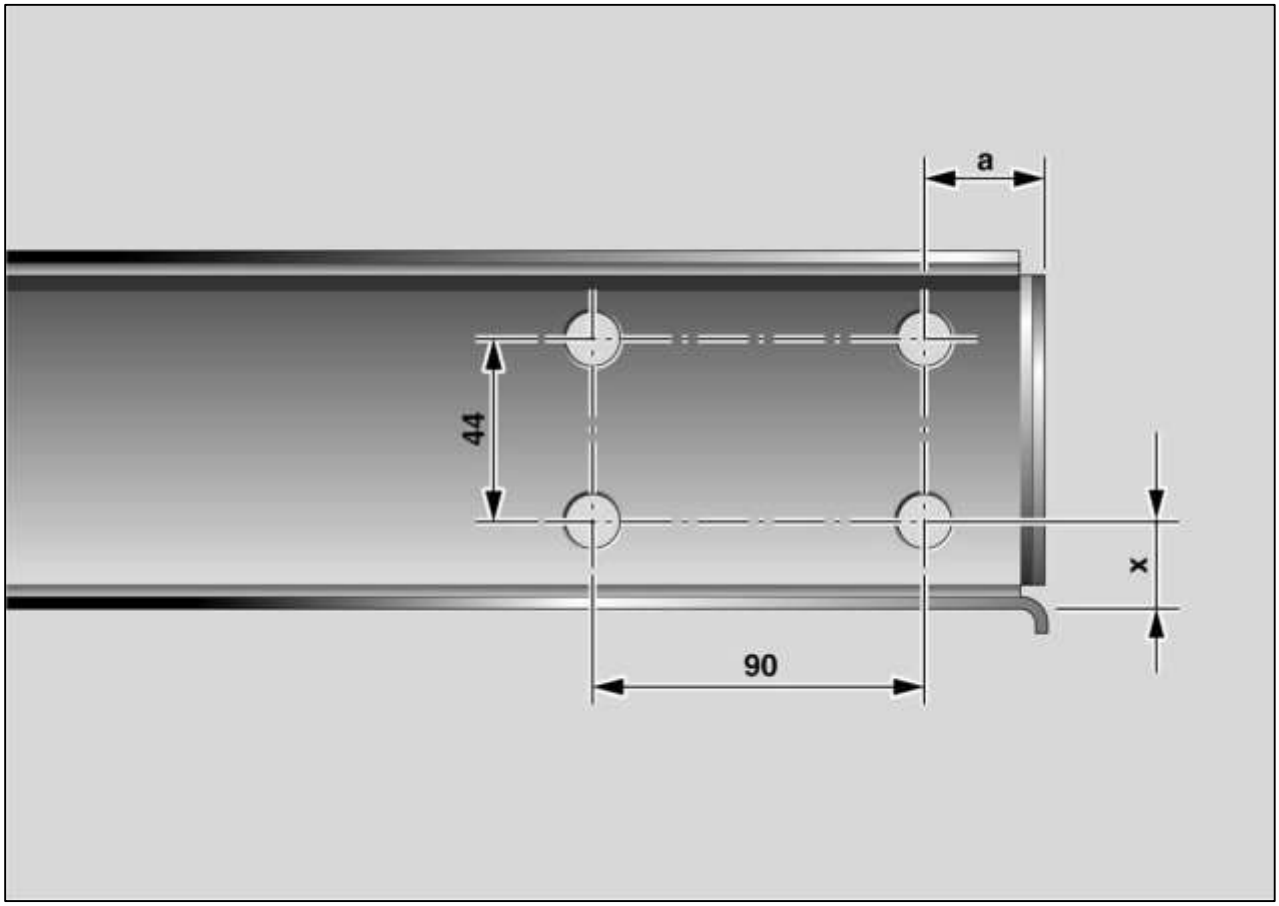

Vehicle type	Wheelbase	Dimension a	Dimension x	Overhang dimension
Chassis/platform	3,665 mm	27 mm	34 mm	1,250 mm
with cab/with double cab 5.0 t	4,325 mm	27 mm	34 mm	1,350 mm

10.4 Weight tables

To ensure sufficient steerability of the vehicle, the minimum front axle load shall be 25% of the total weight.
The kerb weight figures refer to the standard vehicle equipment (incl. driver, tools and full tank) on the base vehicle. Weight tolerances of +/- 5% for gross vehicle weight rating up to 3,500 kg inclusive or +/-3% for gross vehicle weight rating greater than 3,500 kg are in accordance with EU Directive.
When ordering your vehicle, please note that the kerb weight increases when additional equipment is selected and the available payload capacity is thus reduced.
We recommend determining the definitive unladen weight of the entire vehicle by weighing before the conversion.

The abbreviations in the following chapters (10.4.1 to 10.4.16) mean:

[1]: EK = single cabin — KR = short wheelbase
DoKa = double cabin — MR = medium wheelbase
LR = long wheelbase

[2]: Required PR no. for the total weight (GVWR).

[3]: E = single tires
Z = twin tires
S = super single tires

[4]: Empty weight and empty axle loads are based on the cowl panel.

[5]: EU 5 certification up to 2,815 kg unladen weight possible. Comply with country-specific legislation.

10.4.1 Crafter window van (4 cylinder TDI) EU5

Model[1]	PR no.[2] (GVWR)	Wheel-base [mm]	Permitted weights [kg]			Kerb weight incl. driver [kg]			Max. payload [kg]	Tyres[3]
			Total weight	Front axle load	Rear axle load	Total weight	Front axle load	Rear axle load		
Window van (SWB)	0WC	3250	3,500	1,650/1,800	2250	1976	1173	777	1514	E
	0WC	3250	3,500	1650	2250	2586	1259	1130	904	E
	0WC	3250	3,500	1800	2250	2586	1259	1113	904	E
	0WL + 1UG	3250	3190	1,650/1,800	1800	1976	1166	766	1214	E
	0WL + 1UG	3250	3190	1,650/1,800	1800	2586	1275	1158	604	E
	0WC + 1UC	3250	3200	1,650/1,800	2000	1976	1173	777	1224	E
	0WC + 1UC	3250	3200	1,650/1,800	2000	2586	1296	1167	614	E
	0WC + 1UM	3250	3490	1,650/1,800	2250	1976	1173	777	1524	E
	0WC + 1UM	3250	3490	1650	2250	2586	1259	1130	914	E
	0WC + 1UM	3250	3490	1800	2250	2586	1259	1113	914	E

Date: May 2014. For explanations of the notes, see introduction to 10.4 “Weight tables”

Model[1]	PR no.[2] (GVWR)	Wheel-base [mm]	Perm. weights [kg]			Kerb weight incl. driver [kg]			Max. payload [kg]	Tyres[3]
			Total weight	Front axle load	Rear axle load	Total weight	Front axle load	Rear axle load		
Window van (SWB) medium-high roof	0WC	3250	3,500	1,650/1,800	2250	1982	1183	799	1518	E
	0WC	3250	3,500	1650	2250	2586	1237	1130	914	E
	0WC	3250	3,500	1800	2250	2586	1237	1103	914	E
	0WL + 1UG	3250	3190	1,650/1,800	1800	1976	1174	785	1214	E
	0WL + 1UG	3250	3190	1,650/1,800	1800	2586	1274	1159	604	E
	0WC + 1UC	3250	3200	1,650/1,800	2000	1982	1183	799	1218	E
	0WC + 1UC	3250	3200	1,650/1,800	2000	2586	1296	1167	614	E
	0WC + 1UM	3250	3490	1,650/1,800	2250	1982	1183	799	1508	E
	0WC + 1UM	3250	3490	1,650/1,800	2250	2586	1237	1130	904	E
Window van (MWB)	0WC	3665	3,500	1,650/1,800	2250	2028	1198	830	1472	E
	0WC	3665	3,500	1650	2250	2586	1206	1165	914	E
	0WC	3665	3,500	1800	2250	2586	1210	1103	914	E
	0WL + 1UG	3665	3190	1,650/1,800	1800	2005	1189	816	1185	E
	0WL + 1UG	3665	3190	1,650/1,800	1800	2586	1303	1130	604	E
	0WC + 1UC	3665	3200	1,650/1,800	2000	2028	1198	830	1172	
	0WC + 1UC	3665	3200	1,650/1,800	2000	2586	1309	1154	614	
Window van (MWB)	0WC + 1UM	3665	3490	1650	2250	2028	1198	1198	1462	E
	0WC + 1UM	3665	3490	1800	2250	2028	1198	830	1462	E
	0WC + 1UM	3665	3490	1650	2250	2586	1206	1165	904	E
	0WC + 1UM	3665	3490	1800	2250	2586	1217	1106	904	E

Date: May 2014. For explanations of the notes, see introduction to 10.4 "Weight tables"

Model[1]	PR no.[2] (GVWR)	Wheel-base [mm]	Permitted weights [kg]			Kerb weight incl. driver [kg]			Max. payload [kg]	Tyres[3]
			Total weight	Front axle load	Rear axle load	Total weight	Front axle load	Rear axle load		
Window van (MWB) medium-high roof	0WC	3665	3,500	1,650/1,800	2250	2064	1209	855	1436	E
	0WC	3665	3,500	1650	2250	2586	1209	1165	914	E
	0WC	3665	3,500	1800	2250	2586	1209	1104	914	E
	0WL + 1UG	3665	3190	1,650/1,800	1800	2041	1200	841	1149	E
	0WL + 1UG	3665	3190	1,650/1,800	1800	2586	1303	1130	604	E
	0WC + 1UC	3665	3200	1,650/1,800	2000	2064	1209	855	1136	
	0WC + 1UC	3665	3200	1,650/1,800	2000	2586	1308	1155	614	
	0WC + 1UM	3665	3490	1,650/1,800	2250	2064	1209	855	1426	
	0WC + 1UM	3665	3490	1650	2250	2586	1209	1165	904	E
	0WC + 1UM	3665	3490	1800	2250	2586	1215	1108	904	E
Window van (LWB) medium-high roof	0WC	4325	3,500	1,650/1,800	2250	2219	1251	968	1281	E
	0WC	4325	3,500	1650	2250	2586	1251	1204	914	E
	0WC	4325	3,500	1800	2250	2586	1251	1093	914	E
	0WC + 1UC	4325	3200	1,650/1,800	2000	2219	1251	968	981	E
	0WC + 1UC	4325	3200	1,650/1,800	2000	2586	1310	1153	614	E
	0WC + 1UM	4325	3490	1,650/1,800	2250	2219	1251	968	1271	
Window van (LWB) medium-high roof	0WC + 1UM	4325	3490	1650	2250	2586	1251	1204	904	E
	0WC + 1UM	4325	3490	1800	2250	2586	1251	1097	904	E

Date: May 2014. For explanations of the notes, see introduction to 10.4 “Weight tables”

Model [1]	PR no.[2] (GVWR)	Wheelbase [mm]	Perm. weights [kg]			Unl. weight incl. driver [kg]			Max. payload [kg]	Tyres[3]
			Total weight	Front axle load	Rear axle load	Total weight	Front axle load	Rear axle load		
Window van (LWB) medium-high roof over-hang	0WC	4325	3,500	1,650/1,800	2250	2279	1239	1,040	1221	E
	0WC	4325	3,500	1650	2250	2586	1239	1199	914	E
	0WC	4325	3,500	1800	2250	2586	1239	1144	914	E
	0WC + 1UC	4325	3200	1,650/1,800	2000	2279	1239	1,040	921	E
	0WC + 1UC	4325	3200	1,650/1,800	2000	2586	1263	1200	614	E
	0WC + 1UM	4325	3490	1,650/1,800	2250	2279	1239	1,040	1211	
	0WC + 1UM	4325	3490	1650	2250	2586	1239	1199	904	E
	0WC + 1UM	4325	3490	1800	2250	2586	1239	1148	904	E
Window van (MWB) high roof	0WC	3665	3,500	1,650/1,800	2250	2100	1220	880	1400	E
	0WC	3665	3,500	1650	2250	2586	1220	1165	914	E
	0WC	3665	3,500	1800	2250	2586	1220	1105	914	E
	0WC + 1UC	3665	3200	1,650/1,800	2000	2100	1220	880	1,100	E
	0WC + 1UC	3665	3200	1,650/1,800	2000	2586	1307	1156	614	E
	0WC + 1UM	3665	3490	1,650/1,800	2250	2100	1220	880	1390	
	0WC + 1UM	3665	3490	1650	2250	2586	1220	1165	904	E
	0WC + 1UM	3665	3490	1800	2250	2586	1220	1109	904	E
Window van (LWB) high roof	0WC	4325	3,500	1,650/1,800	2250	2246	1259	987	1254	E
	0WC	4325	3,500	1650	2250	2586	1259	1204	914	E
	0WC	4325	3,500	1800	2250	2586	1259	1095	914	E
	0WC + 1UC	4325	3200	1,650/1,800	2000	2246	1259	987	954	E
	0WC + 1UC	4325	3200	1,650/1,800	2000	2586	1308	1155	614	E
	0WC + 1UM	4325	3490	1,650/1,800	2250	2246	1259	987	1244	
	0WC + 1UM	4325	3490	1650	2250	2586	1259	1204	904	E
	0WC + 1UM	4325	3490	1800	2250	2586	1259	1099	904	E

Date: May 2014. For explanations of the notes, see introduction to 10.4 "Weight tables"

Model[1]	PR no.[2] (GVWR)	Wheel-base [mm]	Permitted weights [kg]			Kerb weight incl. driver [kg]			Max. payload [kg]	Tyres[3]
			Total weight	Front axle load	Rear axle load	Total weight	Front axle load	Rear axle load		
Window van (LWB) high roof overhang	0WC	4325	3,500	1,650/1,800	2250	2307	1245	1062	1193	E
	0WC	4325	3,500	1650	2250	2586	1245	1199	914	E
	0WC	4325	3,500	1800	2250	2586	1245	1148	914	E
	0WC + 1UC	4325	3200	1,650/1,800	2000	2307	1245	1062	893	E
	0WC + 1UC	4325	3200	1,650/1,800	2000	2586	1260	1203	614	E
	0WC + 1UM	4325	3490	1650	2250	2307	1245	1062	1183	
	0WC + 1UM	4325	3490	1650	2250	2586	1245	1199	904	E
	0WC + 1UM	4325	3490	1800	2250	2307	1245	1062	1183	E
	0WC + 1UM	4325	3490	1800	2250	2586	1245	1151	904	E

Date: May 2014. For explanations of the notes, see introduction to 10.4 “Weight tables”

10.4.2 Crafter panel van (4 cylinder TDI) EU5/EUV

Model [1]	PR no.[2] (GVWR)	Wheel-base [mm]	Permitted weights [kg]			Kerb weight incl. driver [kg][5]			Max. payload [kg]	Tyres[3]
			Total weight	Front axle load	Rear axle load	Total weight	Front axle load	Rear axle load		
Panel van (SWB)	0WL	3250	3000	1650	1800	1904	1161	743	1096	E
	0WC	3250	3,500	1,650/1,800	2250	1917	1171	746	1583	E
	0WL + 1UN	3250	2800	1650	1650	1904	1161	743	896	E
	0WC + 1UU	3250	2800	1650	1650	1917	1171	746	883	E
	0WL + 1UL	3250	3025	1650	1800	1904	1161	743	1121	E
	0WC + 1UC	3250	3200	1,650/1,800	2000	1917	1171	746	1283	E
	0WC + 1UM	3250	3490	1,650/1,800	2250	1917	1171	746	1573	E
	0WC + 1UB	3250	3550	1,650/1,800	2250	1917	1171	746	1633	E
	0WC + 1UV	3250	3880	1,650/1,800	2430	1936	1171	765	1944	E
Window van (LWB) Medium-high roof	0WL	3250	3000	1650	1800	1936	1171	765	1064	E
	0WC	3250	3,500	1,650/1,800	2250	1949	1181	768	1551	E
	0WL + 1UN	3250	2800	1650	1650	1936	1171	765	864	E
	0WC + 1UU	3250	2800	1650	1650	1949	1181	768	851	E
	0WL + 1UL	3250	3025	1650	1800	1936	1171	765	1089	E
	0WC + 1UC	3250	3200	1,650/1,800	2000	1949	1181	768	1251	E
Window van (LWB) Medium-high roof	0WC + 1UM	3250	3490	1,650/1,800	2250	1949	1181	768	1541	E
	0WC + 1UB	3250	3550	1,650/1,800	2250	1949	1181	768	1601	E
	0WC + 1UV	3250	3880	1800	2430	1968	1181	787	1912	E

Date: May 2014. For explanations of the notes, see introduction to 10.4 “Weight tables”

Model [1]	PR no.[2] (GVWR)	Wheel-base [mm]	Perm. weights [kg]			Kerb weight incl. driver [kg][5]			Max. payload [kg]	Tyres[3]
			Total weight	Front axle load	Rear axle load	Total weight	Front axle load	Rear axle load		
Panel van (MWB)	0WL	3665	3000	1650	1800	1972	1187	785	1028	E
	0WC	3665	3,500	1,650/1,800	2250	1985	1197	788	1515	E
	0WL + 1UN	3665	2800	1650	1650	1972	1187	785	828	E
	0WC + 1UU	3665	2800	1650	1650	1985	1197	788	815	E
	0WL + 1UL	3665	3025	1650	1800	1972	1187	785	1053	E
	0WC + 1UC	3665	3200	1,650/1,800	2000	1985	1197	788	1215	E
	0WC + 1UM	3665	3490	1,650/1,800	2250	1985	1197	788	1505	E
	0WC + 1UB	3665	3550	1,650/1,800	2250	1985	1197	788	1565	E
	0WC + 1UV	3665	3880	1800	2430	2004	1197	807	1876	E
	0WF + 1UX	3665	3,500	1,850/2,000	2300	2265	1292	973	1235	Z/S
	0WF + 1UK	3665	4000	1,850/2,000	3200	2265	1292	973	1735	Z/S
	0WF + 1UY	3665	4250	1,850/2,000	3200	2265	1292	973	1985	Z/S
	0WF + 1UZ	3665	4490	1,850/2,000	3200	2265	1292	973	2225	Z/S
	0WF + 1UW	3665	4600	1,850/2,000	3200	2265	1292	973	2335	Z/S
	0WF + 1UP	3665	4850	1,850/2,000	3,500	2265	1292	973	2585	Z
Panel van (MWB)	0WF	3665	5000	1,850/2,000	3,500	2265	1292	973	2735	Z

Date: May 2014. For explanations of the notes, see introduction to 10.4 "Weight tables"

Model [1]	PR no.[2] (GVWR)	Wheel-base [mm]	Perm. weights [kg]			Kerb weight incl. driver [kg][5]			Max. payload [kg]	Tyres[3]
			Total weight	Front axle load	Rear axle load	Total weight	Front axle load	Rear axle load		
Panel van (MWB) Medium-high roof	0WL	3665	3000	1650	1800	2008	1198	810	992	E
	0WC	3665	3,500	1,650/1,800	2250	2021	1208	813	1479	E
	0WL + 1UN	3665	2800	1650	1650	2008	1198	810	792	E
	0WC + 1UU	3665	2800	1650	1650	2021	1208	813	779	E
	0WL + 1UL	3665	3025	1650	1800	2008	1198	810	1017	E
	0WC + 1UC	3665	3200	1,650/1,800	2000	2021	1208	813	1179	E
	0WC + 1UM	3665	3490	1,650/1,800	2250	2021	1208	813	1469	E
	0WC + 1UB	3665	3550	1,650/1,800	2250	2021	1208	813	1529	E
	0WC + 1UV	3665	3880	1800	2430	2040	1208	832	1840	E
	0WF + 1UX	3665	3,500	1,850/2,000	2300	2301	1303	998	1199	Z/S
	0WF + 1UK	3665	4000	1,850/2,000	3200	2301	1303	998	1699	Z/S
	0WF + 1UY	3665	4250	1,850/2,000	3200	2301	1303	998	1949	Z/S
	0WF + 1UZ	3665	4490	1,850/2,000	3200	2301	1303	998	2189	Z/S
	0WF + 1UW	3665	4600	1,850/2,000	3200	2301	1303	998	2299	Z/S
	0WF + 1UP	3665	4850	1,850/2,000	3,500	2301	1303	998	2549	Z
Panel van (MWB) Medium-high roof	0WF	3665	5000	1,850/2,000	3,500	2301	1303	998	2699	Z

Date: May 2014. For explanations of the notes, see introduction to 10.4 “Weight tables”

Model [1]	PR no.[2] (GVWR)	Wheel-base [mm]	Perm. weights [kg]			Kerb weight incl. driver [kg][5]			Max. payload [kg]	Tyres[3]
			Total weight	Front axle load	Rear axle load	Total weight	Front axle load	Rear axle load		
Panel van (LWB) medium-high roof	0WC	4325	3,500	1,650/1,800	2250	2155	1247	908	1345	E
	0WC + 1UU	4325	2800	1650	1650	2155	1247	908	645	E
	0WC + 1UC	4325	3200	1,650/1,800	2000	2155	1247	908	1045	E
	0WC + 1UM	4325	3490	1,650/1,800	2250	2155	1247	908	1335	E
	0WC + 1UB	4325	3550	1,650/1,800	2250	2155	1247	908	1395	E
	0WC + 1UV	4325	3880	1800	2430	2174	1247	927	1706	E
	0WF + 1UX	4325	3,500	1,850/2,000	2300	2467	1362	1105	1033	Z/S
	0WF + 1UK	4325	4000	1,850/2,000	3200	2467	1362	1105	1533	Z/S
	0WF + 1UY	4325	4250	1,850/2,000	3200	2467	1362	1105	1783	Z/S
	0WF + 1UZ	4325	4490	1,850/2,000	3200	2467	1362	1105	2023	Z/S
	0WF + 1UW	4325	4600	1,850/2,000	3200	2467	1362	1105	2133	Z/S
	0WF + 1UP	4325	4850	1,850/2,000	3,500	2467	1362	1105	2383	Z
	0WF	4325	5000	1,850/2,000	3,500	2467	1362	1105	2533	Z

Date: May 2014. For explanations of the notes, see introduction to 10.4 “Weight tables”

Model [1]	PR no.[2] (GVWR)	Wheel-base [mm]	Permitted weights [kg]			Kerb weight incl. driver [kg][5]			Max. payload [kg]	Tyres[3]
			Total weight	Front axle load	Rear axle load	Total weight	Front axle load	Rear axle load		
Panel van (LWB) medium-high roof overhang	0WC	4325	3,500	1,650/1,800	2250	2207	1238	969	1293	E
	0WC + 1UU	4325	2800	1650	1650	2207	1238	969	593	E
	0WC + 1UC	4325	3200	1,650/1,800	2000	2207	1238	969	993	E
	0WC + 1UM	4325	3490	1,650/1,800	2250	2207	1238	969	1283	E
	0WC + 1UB	4325	3550	1,650/1,800	2250	2207	1238	969	1343	E
	0WC + 1UV	4325	3880	1800	2430	2226	1238	988	1654	E
	0WF + 1UX	4325	3,500	1,850/2,000	2300	2514	1358	1156	986	Z/S
	0WF + 1UK	4325	4000	1,850/2,000	3200	2514	1358	1156	1486	Z/S
	0WF + 1UY	4325	4250	1,850/2,000	3200	2514	1358	1156	1736	Z/S
	0WF + 1UZ	4325	4490	1,850/2,000	3200	2514	1358	1156	1976	Z/S
	0WF + 1UW	4325	4600	1,850/2,000	3200	2514	1358	1156	2086	Z/S
	0WF + 1UP	4325	4850	1,850/2,000	3,500	2514	1358	1156	2336	Z
	0WF	4325	5000	1,850/2,000	3,500	2514	1358	1156	2486	Z

Date: May 2014. For explanations of the notes, see introduction to 10.4 “Weight tables”

Model [1]	PR no.[2] (GVWR)	Wheel-base [mm]	Perm. weights [kg]			Kerb weight incl. driver [kg] [5]			Max. payload [kg]	Tyres[3]
			Total weight	Front axle load	Rear axle load	Total weight	Front axle load	Rear axle load		
Panel van (MWB) High roof	0WC	3665	3,500	1800	2250	2057	1219	838	1443	E
	0WC + 1UU	3665	2800	1650	1650	2057	1219	838	743	E
	0WC + 1UC	3665	3200	1,650/1,800	2000	2057	1219	838	1143	E
	0WC + 1UM	3665	3490	1,650/1,800	2250	2057	1219	838	1433	E
	0WC + 1UB	3665	3550	1,650/1,800	2250	2057	1219	838	1493	E
	0WC + 1UV	3665	3880	1800	2430	2076	1219	857	1804	E
	0WF + 1UX	3665	3,500	1,850/2,000	2300	2337	1314	1023	1163	Z/S
	0WF + 1UK	3665	4000	1,850/2,000	3200	2337	1314	1023	1663	Z/S
	0WF + 1UY	3665	4250	1,850/2,000	3200	2337	1314	1023	1913	Z/S
	0WF + 1UZ	3665	4490	1,850/2,000	3200	2337	1314	1023	2153	Z/S
	0WF + 1UW	3665	4600	1,850/2,000	3200	2337	1314	1023	2263	Z/S
	0WF + 1UP	3665	4850	1,850/2,000	3,500	237	1314	1023	2513	Z
	0WF	3665	5000	1,850/2,000	3,500	2337	1314	1023	2663	Z

Date: May 2014. For explanations of the notes, see introduction to 10.4 “Weight tables”

Model [1]	PR no.[2] (GVWR)	Wheel-base [mm]	Perm. weights [kg]			Kerb weight incl. driver [kg][5]			Max. payload [kg]	Tyres[3]
			Total weight	Front axle load	Rear axle load	Total weight	Front axle load	Rear axle load		
Panel van (LWB) high roof	0WC	4325	3,500	1800	2250	2182	1255	927	1318	E
	0WC + 1UU	4325	2800	1650	1650	2182	1255	927	618	E
	0WC + 1UC	4325	3200	1,650/1,800	2000	2182	1255	927	1018	E
	0WC + 1UM	4325	3490	1,650/1,800	2250	2182	1255	927	1308	E
	0WC + 1UB	4325	3550	1,650/1,800	2250	2182	1255	927	1368	E
	0WC + 1UV	4325	3880	1800	2430	2201	1255	946	1679	E
	0WF + 1UX	4325	3,500	1,850/2,000	2300	2494	1370	1124	1006	Z/S
	0WF + 1UK	4325	4000	1,850/2,000	3200	2494	1370	1124	1506	Z/S
	0WF + 1UY	4325	4250	1,850/2,000	3200	2494	1370	1124	1756	Z/S
	0WF + 1UZ	4325	4490	1,850/2,000	3200	2494	1370	1124	1996	Z/S
	0WF + 1UW	4325	4600	1,850/2,000	3200	2494	1370	1124	2106	Z/S
	0WF + 1UP	4325	4850	1,850/2,000	3,500	2494	1370	1124	2356	Z
	0WF	4325	5000	1,850/2,000	3,500	2494	1370	1124	2506	Z

Date: May 2014. For explanations of the notes, see introduction to 10.4 “Weight tables”

Model [1]	PR no.[2] (GVWR)	Wheel-base [mm]	Perm. weights			Kerb weight incl. driver			Max. payload [kg]	Tyres[3]
			Total weight	Front axle load	Rear axle load	Total weight	Front axle	Rear axle		
Panel van (LWB) high roof overhang	0WC	4325	3,500	1,650/1,800	2250	2235	1244	991	1265	E
	0WC + 1UU	4325	2800	1650	1650	2235	1244	991	565	E
	0WC + 1UC	4325	3200	1,650/1,800	2000	2235	1244	991	965	E
	0WC + 1UM	4325	3490	1,650/1,800	2250	2235	1244	991	1255	E
	0WC + 1UB	4325	3550	1,650/1,800	2250	2235	1244	991	1315	E
	0WC + 1UV	4325	3880	1800	2430	2254	1244	1010	1626	E
	0WF + 1UX	4325	3,500	1,850/2,000	2300	2542	1364	1178	958	Z/S
	0WF + 1UK	4325	4000	1,850/2,000	3200	2542	1364	1178	1458	Z/S
	0WF + 1UY	4325	4250	1,850/2,000	3200	2542	1364	1178	1708	Z/S
	0WF + 1UZ	4325	4490	1,850/2,000	3200	2542	1364	1178	1948	Z/S
	0WF + 1UW	4325	4600	1,850/2,000	3200	2542	1364	1178	2058	Z/S
	0WF + 1UP	4325	4850	1,850/2,000	3,500	2542	1364	1178	2308	Z
	0WF	4325	5000	1,850/2,000	3,500	2542	1364	1178	2458	Z

Date: May 2014. For explanations of the notes, see introduction to 10.4 “Weight tables”

10.4.3 Crafter platform van (4 cylinder TDI) EU5/EUV

Model [1]	PR no.[2] (GVWR)	Wheel-base [mm]	Perm. weights [kg]			Kerb weight incl. driver [kg][5]			Max. payload [kg]	Tyres[3]
			Total weight	Front axle load	Rear axle load	Total weight	Front axle load	Rear axle load		
Flatbed (SWB)	0WL	3250	3000	1650	1800	1849	1166	683	1151	E
	0WC	3250	3,500	1650/	2250	1862	1176	686	1638	E
	0WL + 1UN	3250	2800	1650	1650	1849	1166	683	951	E
	0WC + 1UU	3250	2800	1650	1650	1862	1176	686	938	E
	0WL + 1UL	3250	3025	1650	1800	1849	1166	683	1176	E
	0WC + 1UC	3250	3200	1650/	2000	1862	1176	686	1338	E
	0WC + 1UM	3250	3490	1650/	2250	1862	1176	686	1628	E
	0WC + 1UB	3250	3550	1650/	2250	1862	1176	686	1688	E
	0WC + 1UB	3250	3880	1800	2430	1881	1176	705	1999	E

Date: May 2014. For explanations of the notes, see introduction to 10.4 “Weight tables”

Model 1	PR no.[2] (GVWR)	Wheel-base [mm]	Perm. weights [kg]			Kerb weight incl. driver [kg][5]			Max. payload [kg]	Tyres[3]
			Total weight	Front axle load	Rear axle load	Total weight	Front axle load	Rear axle load		
Flatbed (MWB)	0WL	3665	3000	1650	1800	1898	1197	701	1102	E
	0WC	3665	3,500	1,650/1,800	2250	1911	1207	704	1589	E
	0WL + 1UN	3665	2800	1650	1650	1898	1197	701	902	E
	0WC + 1UU	3665	2800	1650	1650	1911	1207	704	889	E
	0WL + 1UL	3665	3025	1650	1800	1898	1197	701	1127	E
	0WC + 1UC	3665	3200	1,650/1,800	2000	1911	1207	704	1289	E
	0WC + 1UM	3665	3490	1,650/1,800	2250	1911	1207	704	1579	E
	0WC + 1UB	3665	3550	1,650/1,800	2250	1911	1207	704	1639	E
	0WC + 1UV	3665	3880	1800	2430	1930	1207	723	1950	E
	0WF + 1UX	3665	3,500	1,850/2,000	2300	2207	1276	931	1293	Z/S
	0WF + 1UK	3665	4000	1,850/2,000	3200	2207	1276	931	1793	Z/S
	0WF + 1UY	3665	4250	1,850/2,000	3200	2207	1276	931	2043	Z/S
	0WF + 1UZ	3665	4490	1,850/2,000	3200	2207	1276	931	2283	Z/S
	0WF + 1UW	3665	4600	1,850/2,000	3200	2207	1276	931	2393	Z/S
	0WF + 1UP	3665	4850	1,850/2,000	3,500	2207	1276	931	2643	Z
Flatbed	0WF	3665	5000	1,850/2,000	3,500	2207	1276	931	2793	Z

Date: May 2014. For explanations of the notes, see introduction to 10.4 "Weight tables"

Model [1]	PR no.[2] (GVWR)	Wheel-base [mm]	Perm. weights [kg]			Kerb weight incl. driver [kg][5]			Max. payload [kg]	Tyres[3]
			Total weight	Front axle load	Rear axle load	Total weight	Front axle load	Rear axle load		
Flatbed (LWB)	0WC	4325	3,500	1,650/1,800	2250	1990	1272	718	1510	E
	0WC + 1UU	4325	2800	1650	1650	1990	1272	718	810	E
	0WC + 1UC	4325	3200	1,650/1,800	2000	1990	1272	718	1210	E
	0WC + 1UM	4325	3490	1,650/1,800	2250	1990	1272	718	1500	E
	0WC + 1UB	4325	3550	1,650/1,800	2250	1990	1272	718	1560	E
	0WC + 1UV	4325	3880	1800	2430	2009	1272	737	1871	E
	0WF + 1UX	4325	3,500	1,850/2,000	2300	2291	1361	930	1209	Z/S
	0WF + 1UK	4325	4000	1,850/2,000	3200	2291	1361	930	1709	Z/S
	0WF + 1UY	4325	4250	1,850/2,000	3200	2291	1361	930	1959	Z/S
	0WF + 1UZ	4325	4490	1,850/2,000	3200	2291	1361	930	2199	Z/S
	0WF + 1UW	4325	4600	1,850/2,000	3200	2291	1361	930	2309	Z/S
	0WF + 1UP	4325	4850	1,850/2,000	3,500	2291	1361	930	2559	Z
	0WF	4325	5000	1,850/2,000	3,500	2291	1361	930	2709	Z

Version dated: May 2014 For explanations of the remarks, see the introduction to 10.4 “Weight tables”

10.4.4 Crafter chassis with single cab (4 cylinder TDI) EU5/EUV

Model [1]	PR no.[2] (GVWR)	Wheel-base [mm]	Permitted weights [kg]			Kerb weight incl. driver [kg][4, 5]			Max. payload [kg]	Tyres[3]
			Total weight	Front axle load	Rear axle load	Total weight	Front axle load	Rear axle load		
Chassis with SC (SWB)	0WL	3250	3000	1650	1800	1401	947	454	1599	E
	0WC	3250	3,500	1,650/1,800	2250	1414	957	457	2086	E
	0WL + 1UN	3250	2800	1650	1650	1401	947	454	1399	E
	0WC + 1UU	3250	2800	1650	1650	1414	957	457	1386	E
	0WL + 1UL	3250	3025	1650	1800	1401	947	454	1624	E
	0WC + 1UC	3250	3200	1,650/1,800	2000	1414	957	457	1786	E
	0WC + 1UM	3250	3490	1,650/1,800	2250	1414	957	457	2076	E
	0WC + 1UB	3250	3550	1,650/1,800	2250	1414	957	457	2136	E
	0WC + 1UV	3250	3880	1800	2430	1433	957	476	2447	E

Version dated: May 2014 For explanations of the remarks, see the introduction to 10.4 “Weight tables”

Model [1]	PR no.[2] (GVWR)	Wheel-base [mm]	Permitted weights [kg]			Kerb weight incl. driver [kg][4, 5]			Max. payload [kg]	Tyres[3]
			Total weight	Front axle load	Rear axle load	Total weight	Front axle load	Rear axle load		
Chassis with SC (MWB)	0WL	3665	3000	1650	1800	1418	973	445	1582	E
	0WC	3665	3,500	1,650/1,800	2250	1431	983	448	2069	E
	0WL + 1UN	3665	2800	1650	1650	1418	973	445	1382	E
	0WC + 1UU	3665	2800	1650	1650	1431	983	448	1369	E
	0WL + 1UL	3665	3025	1650	1800	1418	973	445	1607	E
	0WC + 1UC	3665	3200	1,650/1,800	2000	1431	983	448	1769	E
	0WC + 1UM	3665	3490	1,650/1,800	2250	1431	983	448	2059	E
	0WC + 1UB	3665	3550	1,650/1,800	2250	1431	983	448	2119	E
	0WC + 1UV	3665	3880	1800	2430	1450	983	467	2430	E
	0WF + 1UX	3665	3,500	1,850/2,000	2300	1656	1053	603	1844	Z/S
	0WF + 1UK	3665	4000	1,850/2,000	3200	1656	1053	603	2344	Z/S
	0WF + 1UY	3665	4250	1,850/2,000	3200	1656	1053	603	2594	Z/S
	0WF + 1UZ	3665	4490	1,850/2,000	3200	1656	1053	603	2834	Z/S
	0WF + 1UW	3665	4600	1,850/2,000	3200	1656	1053	603	2944	Z/S
Chassis with SC (MWB)	0WF + 1UP	3665	4850	1,850/2,000	3,500	1656	11053	603	3194	Z
	0WF	3665	5000	1,850/2,000	3,500	1656	1053	603	3344	Z

Version dated: May 2014 For explanations of the remarks, see the introduction to 10.4 “Weight tables”

Model [1]	PR no.[2] (GVWR)	Wheel-base [mm]	Permitted weights [kg]			Kerb weight incl. driver [kg][4, 5]			Max. payload [kg]	Tyres[3]
			Total weight	Front axle load	Rear axle load	Total weight	Front axle load	Rear axle load		
Chassis with SC (LWB)	0WC	4325	3,500	1,650/1,800	2250	1461	1034	427	2039	E
	0WC + 1UU	4325	2800	1650	1650	1461	1034	427	1339	E
	0WC + 1UC	4325	3200	1,650/1,800	2000	1461	1034	427	1739	E
	0WC + 1UM	4325	3490	1,650/1,800	2250	1461	1034	427	2029	E
	0WC + 1UB	4325	3550	1,650/1,800	2250	1461	1034	427	2089	E
	0WC + 1UV	4325	3880	1800	2430	1480	1034	446	2400	E
	0WF + 1UX	4325	3,500	1,850/2,000	2300	1694	1114	580	1806	Z/S
	0WF + 1UK	4325	4000	1,850/2,000	3200	1694	1114	580	2306	Z/S
	0WF + 1UY	4325	4250	1,850/2,000	3200	1694	1114	580	2556	Z/S
	0WF + 1UZ	4325	4490	1,850/2,000	3200	1694	1114	580	2796	Z/S
	0WF + 1UW	4325	4600	1,850/2,000	3200	1694	1114	580	2906	Z/S
	0WF + 1UP	4325	4850	1,850/2,000	3,500	1694	1114	580	3156	Z
	0WF	4325	5000	1,850/2,000	3,500	1694	1114	580	3306	Z

Version dated: May 2014 For explanations of the remarks, see the introduction to 10.4 “Weight tables”

10.4.5 Crafter platform van with double cab (4 cylinder TDI) EU5/EUV

Model [1]	PR no.[2] (GVWR)	Wheel-base [mm]	Perm. weights [kg]			Kerb weight incl. driver [kg][5]			Max. payload [kg]	Tyres[3]
			Total weight	Front axle load	Rear axle load	Total weight	Front axle load	Rear axle load		
Double cab Flatbed (SWB)	0WL	3250	3000	1650	1800	2007	1240	767	993	E
	0WC	3250	3,500	1,650/1,800	2250	2020	1250	770	1480	E
	0WL + 1UN	3250	2800	1650	1650	2007	1240	767	793	E
	0WC + 1UU	3250	2800	1650	1650	2020	1250	770	780	E
	0WL + 1UL	3250	3025	1650	1800	2007	1240	767	1018	E
	0WC + 1UC	3250	3200	1,650/1,800	2000	2020	1250	770	1180	E
	0WC + 1UM	3250	3490	1,650/1,800	2250	2020	1250	770	1470	E
	0WC + 1UB	3250	3550	1,650/1,800	2250	2020	1250	770	1530	E
	0WC + 1UV	3250	3880	1800	2430	2039	1250	789	1797	E

Version dated: May 2014 For explanations of the remarks, see the introduction to 10.4 “Weight tables”

Model [1]	PR no.[2] (GVWR)	Wheel-base [mm]	Perm. weights [kg]			Kerb weight incl. driver [kg][5]			Max. payload [kg]	Tyres[3]
			Total weight	Front axle load	Rear axle load	Total weight	Front axle load	Rear axle load		
Double cab Flatbed (MWB)	0WL	3665	3000	1650	1800	2061	1283	778	939	E
	0WC	3665	3,500	1,650/1,800	2250	2074	1293	781	1426	E
	0WL + 1UN	3665	2800	1650	1650	2061	1283	778	739	E
	0WC + 1UU	3665	2800	1650	1650	2074	1293	781	726	E
	0WL + 1UL	3665	3025	1650	1800	2061	1283	778	964	E
	0WC + 1UC	3665	3200	1,650/1,800	2000	2074	1293	781	1126	E
	0WC + 1UM	3665	3490	1,650/1,800	2250	2074	1293	781	1416	E
	0WC + 1UB	3665	3550	1,650/1,800	2250	2074	1293	781	1476	E
	0WC + 1UV	3665	3880	1800	2430	2093	1293	800	1743	E
	0WF + 1UX	3665	3,500	1,850/2,000	2300	2358	1386	972	1142	Z/S
	0WF + 1UK	3665	4000	1,850/2,000	3200	2358	1386	972	1642	Z/S
	0WF + 1UY	3665	4250	1,850/2,000	3200	2358	1386	972	1892	Z/S
	0WF + 1UZ	3665	4490	1,850/2,000	3200	2358	1386	972	2132	Z/S
	0WF + 1UW	3665	4600	1,850/2,000	3200	2358	1386	972	2242	Z/S
Double cab Flatbed (MWB)	0WF + 1UP	3665	4850	1,850/2,000	3,500	2358	1386	972	2492	Z
	0WF	3665	5000	1,850/2,000	3,500	2358	1386	972	2642	Z

Version dated: May 2014 For explanations of the remarks, see the introduction to 10.4 "Weight tables"

Model [1]	PR no.[2] (GVWR)	Wheel-base [mm]	Perm. weights [kg]			Kerb weight incl. driver [kg][5]			Max. payload [kg]	Tyres[3]
			Total weight	Front axle load	Rear axle load	Total weight	Front axle load	Rear axle load		
Double cab Flatbed (LWB)	0WC	4325	3,500	1800	2250	2145	1369	776	1355	E
	0WC + 1UC	4325	3200	1800	2000	2145	1369	776	1055	E
	0WC + 1UM	4325	3490	1800	2250	2145	1369	776	1345	E
	0WC + 1UB	4325	3550	1800	2250	2145	1369	776	1405	E
	0WC + 1UV	4325	3880	1800	2430	2164	1369	795	1672	E
	0WF + 1UX	4325	3,500	1,850/2,000	2300	2434	1487	947	1066	Z/S
	0WF + 1UK	4325	4000	1,850/2,000	3200	2434	1487	947	1566	Z/S
	0WF + 1UY	4325	4250	1,850/2,000	3200	2434	1487	947	1816	Z/S
	0WF + 1UZ	4325	4490	1,850/2,000	3200	2434	1487	947	2056	Z/S
	0WF + 1UW	4325	4600	1,850/2,000	3200	2434	1487	947	2166	Z/S
	0WF + 1UP	4325	4850	1,850/2,000	3,500	2434	1487	947	2416	Z
	0WF	4325	5000	1,850/2,000	3,500	2434	1487	947	2566	Z

Version dated: May 2014 For explanations of the remarks, see the introduction to 10.4 "Weight tables"

10.4.6 Crafter chassis with double cab (4 cylinder TDI) EU5/EUV

Model [1]	PR no.[2] (GVWR)	Wheel-base [mm]	Perm. weights [kg]			Kerb weight incl. driver [kg] [4,5]			Max. payload [kg]	Tyres[3]
			Total weight	Front axle load	Rear axle load	Total weight	Front axle load	Rear axle load		
Double cab Chassis (SWB)	0WL	3250	3000	1650	1800	1849	1245	604	1151	E
	0WC	3250	3,500	1,650/1,800	2250	1862	1255	607	1638	E
	0WL + 1UN	3250	2800	1650	1650	1849	1245	604	951	E
	0WC + 1UU	3250	2800	1650	1650	1862	1255	607	938	E
	0WL + 1UL	3250	3025	1650	1800	1849	1245	604	1176	E
	0WC + 1UC	3250	3200	1,650/1,800	2000	1862	1255	607	1338	E
	0WC + 1UM	3250	3490	1,650/1,800	2250	1862	1255	607	1628	E
	0WC + 1UB	3250	3550	1,650/1,800	2250	1862	1255	607	1688	E
	0WC + 1UV	3250	3880	1800	2430	1881	1255	626	1955	E

Version dated: May 2014 For explanations of the remarks, see the introduction to 10.4 “Weight tables”

Model [1]	PR no.[2] (GVWR)	Wheel-base [mm]	Perm. weights [kg]			Kerb weight incl. driver [kg][5]			Max. payload [kg]	Tyres[3]
			Total weight	Front axle load	Rear axle load	Total weight	Front axle load	Rear axle load		
double cab Chassis (MWB)	0WL	3665	3000	1650	1800	1871	1287	584	1129	E
	0WC	3665	3,500	1,650/1,800	2250	1884	1297	587	1616	E
	0WL + 1UN	3665	2800	1650	1650	1871	1287	584	929	E
	0WC + 1UU	3665	2800	1650	1650	1884	1297	587	916	E
	0WL + 1UL	3665	3025	1650	1800	1871	1287	584	1154	E
	0WC + 1UC	3665	3200	1,650/1,800	2000	1884	1297	587	1316	E
	0WC + 1UM	3665	3490	1,650/1,800	2250	1884	1297	587	1606	E
	0WC + 1UB	3665	3550	1,650/1,800	2250	1884	1297	587	1666	E
	0WC + 1UV	3665	3880	1800	2430	1903	1297	606	1933	E
	0WF + 1UX	3665	3,500	1,850/2,000	2300	2127	1391	736	1373	Z/S
	0WF + 1UK	3665	4000	1,850/2,000	3200	2127	1391	736	1873	Z/S
	0WF + 1UY	3665	4250	1,850/2,000	3200	2127	1391	736	2123	Z/S
	0WF + 1UZ	3665	4490	1,850/2,000	3200	2127	1391	736	2363	Z/S
	0WF + 1UW	3665	4600	1,850/2,000	3200	2127	1391	736	2473	Z/S
	0WF + 1UP	3665	4850	1,850/2,000	3,500	2127	1391	736	2723	Z
Double cab Chassis (MWB)	0WF	3665	5000	1,850/2,000	3,500	2127	1391	736	2873	Z

Version dated: May 2014 For explanations of the remarks, see the introduction to 10.4 "Weight tables"

Model [1]	PR no.[2] (GVWR)	Wheel-base [mm]	Perm. weights [kg]			Kerb weight incl. driver [kg][5]			Max. payload [kg]	Tyres[3]
			Total weight	Front axle load	Rear axle load	Total weight	Front axle load	Rear axle load		
Double cab Chassis (LWB)	0WC	4325	3,500	1800	2250	1912	1356	556	1588	E
	0WC + 1UC	4325	3200	1800	2000	1912	1356	556	1288	E
	0WC + 1UM	4325	3490	1800	2250	1912	1356	556	1578	E
	0WC + 1UB	4325	3550	1800	2250	1912	1356	556	1638	E
	0WC + 1UV	4325	3880	1800	2430	1931	1356	575	1905	E
	0WF + 1UX	4325	3,500	1,850/2,000	2300	2141	1478	663	1359	Z/S
	0WF + 1UK	4325	4000	1,850/2,000	3200	2141	1478	663	1859	Z/S
	0WF + 1UY	4325	4250	1,850/2,000	3200	2141	1478	663	2109	Z/S
	0WF + 1UZ	4325	4490	1,850/2,000	3200	2141	1478	663	2349	Z/S
	0WF + 1UW	4325	4600	1,850/2,000	3200	2141	1478	663	2459	Z/S
	0WF + 1UP	4325	4850	1,850/2,000	3,500	2141	1478	663	2709	Z
	0WF	4325	5000	1,850/2,000	3,500	2141	1478	663	2859	Z

Version dated: May 2014 For explanations of the remarks, see the introduction to 10.4 “Weight tables”

10.4.7 Crafter window van (4 cylinder TDI) EUVI (SCR)

Model [1]	PR no.[2] (GVWR)	Wheel-base [mm]	Perm. weights [kg]			Unl. weight incl. driver [kg]			Max. payload [kg]	Tyres[3]
			Total weight	Front axle load	Rear axle load	Total weight	Front axle load	Rear axle load		
Window van (SWB)	0WC	3250	3,500	1650	2250	2356	1203	894	1144	E
	0WC	3250	3,500	1800	2250	2356	1203	874	1144	E
	0WL + 1UG	3250	3190	1,650/1,800	1800	2356	1196	906	834	E
	0WC + 1UC	3250	3200	1,650/1,800	2000	2356	1203	915	844	E
	0WC + 1UM	3250	3490	1650	2250	2356	1203	894	1134	E
	0WC + 1UM	3250	3490	1800	2250	2356	1203	877	1134	E
Window van (SWB) Medium-high roof	0WC	3250	3,500	1650	2250	2356	1213	894	1144	E
	0WC	3250	3,500	1800	2250	2356	1213	874	1144	E
	0WL + 1UG	3250	3190	1,650/1,800	1800	2356	1204	907	834	E
	0WC + 1UC	3250	3200	1,650/1,800	2000	2356	1203	915	844	E
	0WC + 1UM	3250	3490	1650	2250	2356	1213	894	1134	E
	0WC + 1UM	3250	3490	1800	2250	2356	1213	877	1134	E
Window van (MWB)	0WC	3665	3,500	1650	2250	2356	1228	930	1144	E
	0WC	3665	3,500	1800	2250	2356	1228	851	1144	E
	0WL + 1UG	3665	3190	1,650/1,800	1800	2356	1219	893	834	E
	0WC + 1UC	3665	3200	1,650/1,800	2000	2356	1228	902	844	E
Window van (MWB)	0WC + 1UM	3665	3490	1650	2250	2356	1228	930	1134	E
	0WC + 1UM	3665	3490	1800	2250	2356	1228	855	1134	E

Version dated: May 2014 For explanations of the remarks, see the introduction to 10.4 “Weight tables”

Model [1]	PR no.[2] (GVWR)	Wheel-base [mm]	Permitted weights [kg]			Unl. weight incl. driver [kg]			Max. payload [kg]	Tyres[3]
			Total weight	Front axle load	Rear axle load	Total weight	Front axle load	Rear axle load		
Window van (MWB) Medium-high roof	0WC	3665	3,500	1650	2250	2356	1239	930	1144	E
	0WC	3665	3,500	1800	2250	2356	1239	853	1144	E
	0WL + 1UG	3665	3190	1,650/1,800	1800	2356	1230	894	834	E
	0WC + 1UC	3665	3200	1,650/1,800	2000	2356	1228	902	844	E
	0WC + 1UM	3665	3490	1650	2250	2356	1239	930	1134	E
	0WC + 1UM	3665	3490	1800	2250	2356	1239	856	1134	E
Window van (LWB) Medium-high roof	0WC	4325	3,500	1650	2250	2356	1281	974	1144	E
	0WC	4325	3,500	1800	2250	2356	1281	963	1144	E
	0WC + 1UC	4325	3200	1,650/1,800	2000	2356	1281	963	844	E
	0WC + 1UM	4325	3490	1650	2250	2356	1281	974	1134	E
	0WC + 1UM	4325	3490	1800	2250	2356	1281	963	1134	E
Window van (LWB) Medium-high roof Overhang	0WC	4325	3,500	1650	2250	2356	1269	1035	1144	E
	0WC	4325	3,500	1800	2250	2356	1269	1035	1144	E
	0WC + 1UC	4325	3200	1,650/1,800	2000	2356	1269	1035	844	E
	0WC + 1UM	4325	3490	1650	2250	2356	1269	1035	1134	E
	0WC + 1UM	4325	3490	1800	2250	2356	1269	1035	1134	E

Version dated: May 2014 For explanations of the remarks, see the introduction to 10.4 “Weight tables”

Model [1]	PR no.[2] (GVWR)	Wheelbase [mm]	Permitted weights [kg]			Unl. weight incl. driver [kg]			Max. payload [kg]	Tyres[3]
			Total weight	Front axle load	Rear axle load	Total weight	Front axle load	Rear axle load		
Window van (MWB) high roof	0WC	3665	3,500	1650	2250	2356	1250	930	1144	E
	0WC	3665	3,500	1800	2250	2356	1250	875	1144	E
	0WC + 1UC	3665	3200	1,650/1,800	2000	2356	1228	902	844	E
	0WC + 1UM	3665	3490	1650	2250	2356	1250	930	1134	E
	0WC + 1UM	3665	3490	1800	2250	2356	1250	875	1134	E
Window van (LWB) High roof	0WC	4325	3,500	1650	2250	2356	1289	982	1144	E
	0WC + 1UC	4325	3200	1,650/1,800	2000	2356	1289	982	844	E
	0WC + 1UM	4325	3490	1,650/1,800	2250	2356	1289	982	1134	
Window van (LWB) High roof Overhang	0WC	4325	3,500	1,650/1,800	2250	2356	1275	1057	1144	E
	0WC + 1UC	4325	3200	1,650/1,800	2000	2356	1275	1057	844	E
	0WC + 1UM	4325	3490	1,650/1,800	2250	2356	1275	1057	1134	E

Version dated: May 2014 For explanations of the remarks, see the introduction to 10.4 “Weight tables”

10.4.8 Crafter panel van (4 cylinder TDI) EUVI (SCR)

Model [1]	PR no.[2] (GVWR)	Wheel-base [mm]	Perm. weights [kg]			Unl. weight incl. driver [kg]			Max. payload [kg]	Tyres[3]
			Total weight	Front axle load	Rear axle load	Total weight	Front axle load	Rear axle load		
Panel van (SWB)	0WL	3250	3000	1650	1800	2356	1191	863	644	E
	0WC	3250	3,500	1650	2250	2356	1201	897	1144	E
	0WC	3250	3,500	1800	2250	2356	1201	855	1144	E
	0WL + 1UN	3250	2800	1650	1650	2356	1247	938	444	E
	0WC + 1UU	3250	2800	1650	1650	2356	1252	933	444	E
	0WL + 1UL	3250	3025	1650	1800	2356	1191	853	669	E
	0WC + 1UC	3250	3200	1,650/1,800	2000	2356	1257	936	844	E
	0WC + 1UM	3250	3490	1650	2250	2356	1201	897	1134	E
	0WC + 1UM	3250	3490	1800	2250	2356	1201	855	1134	E
	0WC + 1UB	3250	3550	1800	2250	2356	1201	855	1194	E
	0WC + 1UB	3250	3550	1650	2250	2356	1201	897	1194	E
	0WC + 1UV	3250	3880	1800	2430	2356	1201	855	1524	E
Panel van (SWB) Medium-high roof	0WL	3250	3000	1650	1800	2356	1201	865	644	E
	0WC	3250	3,500	1650	2250	2356	1211	897	1144	E
	0WC	3250	3,500	1800	2250	2356	1211	845	1144	E
	0WL + 1UN	3250	2800	1650	1650	2356	1244	941	444	E
Panel van (SWB) Medium-high roof	0WC + 1UU	3250	2800	1650	1650	2356	1249	936	444	E
	0WL + 1UL	3250	3025	1650	1800	2356	1201	855	669	E
	0WC + 1UC	3250	3200	1,650/1,800	2000	2356	1255	938	844	E
	0WC + 1UM	3250	3490	1650	2250	2356	1211	897	1134	E
	0WC + 1UM	3250	3490	1800	2250	2356	1211	845	1134	E
	0WC + 1UB	3250	3550	1650	2250	2356	1211	897	1194	E

Model [1]	PR no.[2] (GVWR)	Wheel-base [mm]	Perm. weights [kg]			Unl. weight incl. driver [kg]			Max. payload [kg]	Tyres[3]
			Total weight	Front axle load	Rear axle load	Total weight	Front axle load	Rear axle load		
	0WC + 1UB	3250	3550	1800	2250	2356	1211	845	1194	E
	0WC + 1UV	3250	3880	1800	2430	2356	1211	845	1524	E

Model [1]	PR no.[2] (GVWR)	Wheel-base [mm]	Perm. weights			Unl. weight incl. driver			Max. payload [kg]	Tyres[3]
			Total weight	Front axle	Rear axle load	Total weight	Front axle	Rear axle		
Panel van (MWB)	0WL	3665	3000	1650	1800	2356	1217	869	644	E
	0WC	3665	3,500	1650	2250	2356	1227	918	1144	E
	0WC	3665	3,500	1800	2250	2356	1227	829	1144	E
	0WL + 1UN	3665	2800	1650	1650	2356	1242	943	444	E
	0WC + 1UU	3665	2800	1650	1650	2356	1247	938	444	E
	0WL + 1UL	3665	3025	1650	1800	2356	1217	860	669	E
	0WC + 1UC	3665	3200	1,650/1,800	2000	2356	1259	934	844	E
	0WC + 1UM	3665	3490	1650	2250	2356	1227	918	1134	E
	0WC + 1UM	3665	3490	1800	2250	2356	1227	829	1134	E
	0WC + 1UB	3665	3550	1650	2250	2356	1227	918	1194	E
	0WC + 1UB	3665	3550	1800	2250	2356	1227	829	1194	E
	0WC + 1UV	3665	3880	1800	2430	2356	1227	829	1524	E
	0WF + 1UX	3665	3,500	1,850/2,000	2300	2356	1322	968	1144	Z/S
	0WF + 1UK	3665	4000	1,850/2,000	3200	2356	1322	968	1644	Z/S
	0WF + 1UY	3665	4250	1,850/2,000	3200	2356	1322	968	1894	Z/S
Panel van (MWB)	0WF + 1UZ	3665	4490	1,850/2,000	3200	2356	1322	968	2134	Z/S
	0WF + 1UW	3665	4600	1,850/2,000	3200	2356	1322	968	2244	Z/S
	0WF + 1UP	3665	4850	1,850/2,000	3,500	2356	1322	968	2494	Z
	0WF	3665	5000	1,850/2,000	3,500	2356	1322	968	2644	Z

Date: May 2014. For explanations of the notes, see introduction to 10.4 “Weight tables”

Model [1]	PR no.[2] (GVWR)	Wheel-base [mm]	Permitted weights [kg]			Unl. weight incl. driver [kg]			Max. payload [kg]	Tyres[3]
			Total weight	Front axle load	Rear axle load	Total weight	Front axle load	Rear axle load		
Panel van (MWB) medium-high roof	0WL	3665	3000	1650	1800	2356	1228	872	644	E
	0WC	3665	3,500	1650	2250	2356	1238	918	1144	E
	0WC	3665	3,500	1800	2250	2356	1238	822	1144	E
	0WL + 1UN	3665	2800	1650	1650	2356	1239	946	444	E
	0WC + 1UU	3665	2800	1650	1650	2356	1245	940	444	E
	0WL + 1UL	3665	3025	1650	1800	2356	1228	862	669	E
	0WC + 1UC	3665	3200	1,650/1,800	2000	2356	1256	937	844	E
	0WC + 1UM	3665	3490	1650	2250	2356	1238	918	1134	E
	0WC + 1UM	3665	3490	1800	2250	2356	1238	826	1134	E
	0WC + 1UB	3665	3550	1650	2250	2356	1238	918	1194	E
	0WC + 1UB	3665	3550	1800	2250	2356	1238	818	1194	E
	0WC + 1UV	3665	3880	1800	2430	2356	1238	827	1524	E
	0WF + 1UX	3665	3,500	1,850/2,000	2300	2356	1333	993	1144	Z/S
	0WF + 1UK	3665	4000	1,850/2,000	3200	2356	1333	993	1644	Z/S
	0WF + 1UY	3665	4250	1,850/2,000	3200	2356	1333	993	1894	Z/S
Panel van (MWB) medium-high roof	0WF + 1UZ	3665	4490	1,850/2,000	3200	2356	1333	993	2134	Z/S
	0WF + 1UW	3665	4600	1,850/2,000	3200	2356	1333	993	2244	Z/S
	0WF + 1UP	3665	4850	1,850/2,000	3,500	2356	1333	993	2494	Z
	0WF	3665	5000	1,850/2,000	3,500	2356	1333	993	2644	Z

Date: May 2014. For explanations of the notes, see introduction to 10.4 "Weight tables"

Model [1]	PR no.[2] (GVWR)	Wheel-base [mm]	Permitted weights [kg]			Unl. weight incl. driver [kg]			Max. payload [kg]	Tyres[3]
			Total weight	Front axle load	Rear axle load	Total weight	Front axle load	Rear axle load		
Panel van (LWB) medium-high roof	0WC	4325	3,500	1650	2250	2356	1277	943	1144	E
	0WC	4325	3,500	1800	2250	2356	1277	903	1144	E
	0WC + 1UU	4325	2800	1650	1650	2356	1277	953	444	E
	0WC + 1UC	4325	3200	1,650/1,800	2000	2356	1277	948	844	E
	0WC + 1UM	4325	3490	1650	2250	2356	1277	943	1134	E
	0WC + 1UM	4325	3490	1800	2250	2356	1277	903	1134	E
	0WC + 1UB	4325	3550	1650	2250	2356	1277	943	1194	E
	0WC + 1UB	4325	3550	1800	2250	2356	1277	903	1194	E
	0WC + 1UV	4325	3880	1800	2430	2356	1277	922	1524	E
	0WF + 1UX	4325	3,500	1,850/2,000	2300	2492	1392	1,100	1008	Z/S
	0WF + 1UK	4325	4000	1,850/2,000	3200	2492	1392	1,100	1508	Z/S
	0WF + 1UY	4325	4250	1,850/2,000	3200	2492	1392	1,100	1758	Z/S
	0WF + 1UZ	4325	4490	1,850/2,000	3200	2492	1392	1,100	1998	Z/S
	0WF + 1UW	4325	4600	1,850/2,000	3200	2492	1362	1,100	2108	Z/S
Panel van (LWB) medium-high roof	0WF + 1UP	4325	4850	1,850/2,000	3,500	2492	1392	1,100	2358	Z
	0WF	4325	5000	1,850/2,000	3,500	2492	1392	1,100	2508	Z

Date: May 2014. For explanations of the notes, see introduction to 10.4 "Weight tables"

Model [1]	PR no.[2] (GVWR)	Wheel-base [mm]	Permitted weights [kg]			Unl. weight incl. driver [kg]			Max. payload [kg]	Tyres[3]
			Total weight	Front axle load	Rear axle load	Total weight	Front axle load	Rear axle load		
Panel van (LWB) Medium-high roof Overhang	0WC	4325	3,500	1,650/1,800	2250	2356	1268	964	1144	E
	0WC + 1UU	4325	2800	1650	1650	2356	1268	996	444	E
	0WC + 1UC	4325	3200	1,650/1,800	2000	2356	1268	990	844	E
	0WC + 1UM	4325	3490	1,650/1,800	2250	2356	1268	964	1134	E
	0WC + 1UB	4325	3550	1,650/1,800	2250	2356	1268	964	1194	E
	0WC + 1UV	4325	3880	1800	2430	2356	1268	983	1524	E
	0WF + 1UX	4325	3,500	1,850/2,000	2300	2539	1388	1151	961	Z/S
	0WF + 1UK	4325	4000	1,850/2,000	3200	2539	1388	1151	1461	Z/S
	0WF + 1UY	4325	4250	1,850/2,000	3200	2539	1388	1151	1711	Z/S
	0WF + 1UZ	4325	4490	1,850/2,000	3200	2539	1388	1151	1951	Z/S
	0WF + 1UW	4325	4600	1,850/2,000	3200	2539	1388	1151	2061	Z/S
	0WF + 1UP	4325	4850	1,850/2,000	3,500	2539	1388	1151	2311	Z
	0WF	4325	5000	1,850/2,000	3,500	2539	1388	1151	2461	Z

Date: May 2014. For explanations of the notes, see introduction to 10.4 “Weight tables”

Model [1]	PR no.[2] (GVWR)	Wheel-base [mm]	Permitted weights [kg]			Unl. weight incl. driver [kg]			Max. payload [kg]	Tyres[3]
			Total weight	Front axle load	Rear axle load	Total weight	Front axle load	Rear axle load		
Panel van (MWB) High roof	0WC	3665	3,500	1650	2250	2356	1249	918	1144	E
	0WC	3665	3,500	1800	2250	2356	1249	833	1144	E
	0WC + 1UU	3665	2800	1650	1650	2356	1249	943	444	E
	0WC + 1UC	3665	3200	1,650/1,800	2000	2356	1253	940	844	E
	0WC + 1UM	3665	3490	1650	2250	2356	1249	918	1134	E
	0WC + 1UM	3665	3490	1800	2250	2356	1249	833	1134	E
	0WC + 1UB	3665	3550	1650	2250	2356	1249	918	1194	E
	0WC + 1UB	3665	3550	1650	2250	2356	1249	833	1194	E
	0WC + 1UV	3665	3880	1800	2430	2356	1249	852	1524	E
	0WF + 1UX	3665	3,500	1,850/2,000	2300	2362	1344	1018	1138	Z/S
	0WF + 1UK	3665	4000	1,850/2,000	3200	2362	1344	1018	1638	Z/S
	0WF + 1UY	3665	4250	1,850/2,000	3200	2362	1344	1018	1888	Z/S
	0WF + 1UZ	3665	4490	1,850/2,000	3200	2362	1344	1018	2128	Z/S
	0WF + 1UW	3665	4600	1,850/2,000	3200	2362	1344	1018	2238	Z/S
	0WF + 1UP	3665	4850	1,850/2,000	3,500	2362	1344	1018	2488	Z
Panel van (MWB)	0WF	3665	5000	1,850/2,000	3,500	2362	1344	1018	2638	Z

Date: May 2014. For explanations of the notes, see introduction to 10.4 “Weight tables”

Model [1]	PR no.[2] (GVWR)	Wheel-base [mm]	Permitted weights [kg]			Unl. weight incl. driver [kg]			Max. payload [kg]	Tyres[3]
			Total weight	Front axle load	Rear axle load	Total weight	Front axle load	Rear axle load		
Panel van (LWB) High roof	0WC	4325	3,500	1650	2250	2356	1285	943	1144	E
	0WC + 1UU	4325	2800	1650	1650	2356	1285	955	444	E
	0WC + 1UU	4325	2800	1800	1650	2356	1274	998	444	E
	0WC + 1UC	4325	3200	1,650/1,800	2000	2356	1285	950	844	E
	0WC + 1UM	4325	3490	1650	2250	2356	1285	943	1134	E
	0WC + 1UM	4325	3490	1800	2250	2356	1285	922	1134	E
	0WC + 1UB	4325	3550	1650	2250	2356	1285	943	1194	E
	0WC + 1UB	4325	3550	1800	2250	2356	1285	922	1194	E
	0WC + 1UV	4325	3880	1800	2430	2356	1285	941	1524	E
	0WF + 1UX	4325	3,500	1,850/2,000	2300	2519	1400	1119	981	Z/S
	0WF + 1UK	4325	4000	1,850/2,000	3200	2519	1400	1119	1481	Z/S
	0WF + 1UY	4325	4250	1,850/2,000	3200	2519	1400	1119	1731	Z/S
	0WF + 1UZ	4325	4490	1,850/2,000	3200	2519	1400	1119	1971	Z/S
	0WF + 1UW	4325	4600	1,850/2,000	3200	2519	1400	1119	2081	Z/S
Panel van (LWB) High roof	0WF + 1UP	4325	4850	1,850/2,000	3,500	2519	1400	1119	2331	Z
	0WF	4325	5000	1,850/2,000	3,500	2519	1400	1119	2481	Z

Date: May 2014. For explanations of the notes, see introduction to 10.4 “Weight tables”

Model [1]	PR no.[2] (GVWR)	Wheel-base [mm]	Permitted weights [kg]			Kerb weight incl. driver [kg]			Max. payload [kg]	Tyres[3]
			Total weight	Front axle load	Rear axle load	Total weight	Front axle load	Rear axle load		
Panel van (LWB) High roof Overhang	0WC	4325	3,500	1,650/1,800	2250	2356	1274	986	1144	E
	0WC + 1UU	4325	2800	1650	1650	2356	1274	993	844	E
	0WC + 1UU	4325	2800	1800	1650	2356	1274	993	844	E
	0WC + 1UC	4325	3200	1,650/1,800	2000	2356	1274	993	844	E
	0WC + 1UM	4325	3490	1650	2250	2356	1274	986	1134	E
	0WC + 1UM	4325	3490	1800	2250	2356	1274	986	1134	E
	0WC + 1UB	4325	3550	1,650/1,800	2250	2356	1274	986	1194	E
	0WC + 1UV	4325	3880	1800	2430	2356	1274	1005	1524	E
	0WF + 1UX	4325	3,500	1,850/2,000	2300	2567	1394	1173	933	Z/S
	0WF + 1UK	4325	4000	1,850/2,000	3200	2567	1394	1173	1433	Z/S
	0WF + 1UY	4325	4250	1,850/2,000	3200	2567	1394	1173	1683	Z/S
	0WF + 1UZ	4325	4490	1,850/2,000	3200	2567	1394	1173	1923	Z/S
	0WF + 1UW	4325	4600	1,850/2,000	3200	2567	1394	1173	2033	Z/S
	0WF + 1UP	4325	4850	1,850/2,000	3,500	2567	1394	1173	2283	Z
	0WF	4325	5000	1,850/2,000	3,500	2567	1394	1173	2433	Z

Date: May 2014. For explanations of the notes, see introduction to 10.4 “Weight tables”

10.4.9 Crafter platform van (4 cylinder TDI) EUVI (SCR)

Model [1]	PR no.[2] (GVWR)	Wheel-base [mm]	Permitted weights [kg]			Unl. weight incl. driver [kg]			Max. payload [kg]	Tyres[3]
			Total weight	Front axle load	Rear axle load	Total weight	Front axle load	Rear axle load		
Flatbed (SWB)	0WL	3250	3000	1650	1800	2356	1196	678	644	E
	0WC	3250	3,500	1,650/1,800	2250	2356	1206	681	1144	E
	0WL + 1UN	3250	2800	1650	1650	2356	1196	678	444	E
	0WC + 1UU	3250	2800	1650	1650	2356	1206	681	444	E
	0WL + 1UL	3250	3025	1650	1800	2356	1196	678	669	E
	0WC + 1UC	3250	3200	1650/	2000	2356	1206	681	844	E
	0WC + 1UM	3250	3490	1650/	2250	2356	1206	681	1134	E
	0WC + 1UB	3250	3550	1650/	2250	2356	1206	681	1194	E
	0WC + 1UV	3250	3880	1800	2430	2356	1206	700	1524	E

Date: May 2014. For explanations of the notes, see introduction to 10.4 “Weight tables”

Model [1]	PR no.[2] (GVWR)	Wheel-base [mm]	Perm. weights [kg]			Unl. weight incl. driver [kg]			Max. payload [kg]	Tyres[3]
			Total weight	Front axle load	Rear axle load	Total weight	Front axle load	Rear axle load		
Flatbed (MWB)	0WL	3665	3000	1650	1800	2356	1227	696	644	E
	0WC	3665	3,500	1,650/1,800	2250	2356	1237	699	1144	E
	0WL + 1UN	3665	2800	1650	1650	2356	1227	696	444	E
	0WC + 1UU	3665	2800	1650	1650	2356	1237	699	444	E
	0WL + 1UL	3665	3025	1650	1800	2356	1227	696	669	E
	0WC + 1UC	3665	3200	1,650/1,800	2000	2356	1237	699	844	E
	0WC + 1UM	3665	3490	1,650/1,800	2250	2356	1237	699	1134	E
	0WC + 1UB	3665	3550	1,650/1,800	2250	2356	1237	699	1194	E
	0WC + 1UV	3665	3880	1800	2430	2356	1237	718	1524	E
	0WF + 1UX	3665	3,500	1,850/2,000	2300	2356	1306	926	1144	Z/S
	0WF + 1UK	3665	4000	1,850/2,000	3200	2356	1306	926	1644	Z/S
	0WF + 1UY	3665	4250	1,850/2,000	3200	2356	1306	926	1894	Z/S
	0WF + 1UZ	3665	4490	1,850/2,000	3200	2356	1306	926	2134	Z/S
	0WF + 1UW	3665	4600	1,850/2,000	3200	2356	1306	926	2244	Z/S
Flatbed (MWB)	0WF + 1UP	3665	4850	1,850/2,000	3,500	2356	1306	926	2494	Z
	0WF	3665	5000	1,850/2,000	3,500	2356	1306	926	2644	Z

Date: May 2014. For explanations of the notes, see introduction to 10.4 “Weight tables”

Model [1]	PR no.[2] (GVWR)	Wheel-base [mm]	Perm. weights [kg]			Unl. weight incl. driver [kg]			Max. payload [kg]	Tyres[3]
			Total weight	Front axle load	Rear axle load	Total weight	Front axle load	Rear axle load		
Flatbed (LWB)	0WC	4325	3,500	1650	2250	2355	1272	718	1145	E
	0WC	4325	3,500	1800	2250	2356	1302	713	1144	E
	0WC + 1UU	4325	2800	1650	1650	2356	1302	713	444	E
	0WC + 1UC	4325	3200	1650	2000	2355	1272	718	845	E
	0WC + 1UC	4325	3200	1800	2000	2356	1302	713	844	E
	0WC + 1UM	4325	3490	1650	2250	2355	1272	718	1135	E
	0WC + 1UM	4325	3490	1800	2250	2356	1302	713	1134	E
	0WC + 1UB	4325	3550	1650	2250	2355	1272	718	1195	E
	0WC + 1UB	4325	3550	1800	2250	2356	1302	713	1194	E
	0WC + 1UV	4325	3880	1800	2430	2356	1302	732	1524	E
	0WF + 1UX	4325	3,500	1,850/2,000	2300	2356	1391	925	1144	Z/S
	0WF + 1UK	4325	4000	1,850/2,000	3200	2356	1391	925	1644	Z/S
	0WF + 1UY	4325	4250	1,850/2,000	3200	2356	1391	925	1894	Z/S
	0WF + 1UZ	4325	4490	1,850/2,000	3200	2356	1391	925	2134	Z/S
	0WF + 1UW	4325	4600	1,850/2,000	3200	2356	1391	925	2244	Z/S
Flatbed (LWB)	0WF + 1UP	4325	4850	1,850/2,000	3,500	2356	1391	925	2494	Z
	0WF	4325	5000	1,850/2,000	3,500	2356	1391	925	2644	Z

Date: May 2014. For explanations of the notes, see introduction to 10.4 “Weight tables”

10.4.10 Crafter chassis with single cab (4 cylinder TDI) EUVI (SCR)

Model [1]	PR no.[2] (GVWR)	Wheel-base [mm]	Perm. weights [kg]			Kerb weight incl. driver [kg][4, 5]			Max. payload [kg]	Tyres[3]
			Total weight	Front axle load	Rear axle load	Total weight	Front axle load	Rear axle load		
Chassis with SC (SWB)	0WL	3250	3000	1650	1800	1426	977	449	1574	E
	0WC	3250	3,500	1,650/1,800	2250	1439	987	452	2061	E
	0WL + 1UN	3250	2800	1650	1650	1426	977	449	1374	E
	0WC + 1UU	3250	2800	1650	1650	1439	987	452	1361	E
	0WL + 1UL	3250	3025	1650	1800	1426	977	449	1599	E
	0WC + 1UC	3250	3200	1,650/1,800	2000	1439	987	452	1761	E
	0WC + 1UM	3250	3490	1,650/1,800	2250	1439	987	452	2051	E
	0WC + 1UB	3250	3550	1,650/1,800	2250	1439	987	452	2111	E
	0WC + 1UV	3250	3880	1800	2430	1458	987	471	2422	E

Date: May 2014. For explanations of the notes, see introduction to 10.4 “Weight tables”

Model [1]	PR no.[2] (GVWR)	Wheel-base [mm]	Permitted weights [kg]			Kerb weight incl. driver [kg][4]			Max. payload [kg]	Tyres[3]
			Total weight	Front axle load	Rear axle load	Total weight	Front axle load	Rear axle load		
Chassis with SC (MWB)	0WL	3665	3000	1650	1800	1443	1003	440	1557	E
	0WC	3665	3,500	1,650/1,800	2250	1456	1013	443	2044	E
	0WL + 1UN	3665	2800	1650	1650	1443	1003	440	1357	E
	0WC + 1UU	3665	2800	1650	1650	1456	1013	443	1344	E
	0WL + 1UL	3665	3025	1650	1800	1443	1003	440	1582	E
	0WC + 1UC	3665	3200	1,650/1,800	2000	1456	1013	443	1744	E
	0WC + 1UM	3665	3490	1,650/1,800	2250	1456	1013	443	2034	E
	0WC + 1UB	3665	3550	1,650/1,800	2250	1456	1013	443	2094	E
	0WC + 1UV	3665	3880	1800	2430	1475	1013	462	2405	E
	0WF + 1UX	3665	3,500	1,850/2,000	2300	1681	1083	598	1819	Z/S
	0WF + 1UK	3665	4000	1,850/2,000	3200	1681	1083	598	2319	Z/S
	0WF + 1UY	3665	4250	1,850/2,000	3200	1681	1083	598	2569	Z/S
	0WF + 1UZ	3665	4490	1,850/2,000	3200	1681	1083	598	2809	Z/S
	0WF + 1UW	3665	4600	1,850/2,000	3200	1681	1083	598	2919	Z/S
	0WF + 1UP	3665	4850	1,850/2,000	3,500	1681	1083	598	3169	Z
Chassis with SC (MWB)	0WF	3665	5000	1,850/2,000	3,500	1681	1083	598	3319	Z

Date: May 2014. For explanations of the notes, see introduction to 10.4 "Weight tables"

Model [1]	PR no.[2] (GVWR)	Wheel-base [mm]	Perm. weights [kg]			Kerb weight incl. driver [kg][4]			Max. payload [kg]	Tyres[3]
			Total weight	Front axle load	Rear axle load	Total weight	Front axle load	Rear axle load		
Chassis with SC (LWB)	0WC	4325	3,500	1,650/1,800	2250	1486	1064	422	2014	E
	0WC + 1UU	4325	2800	1650	1650	1486	1064	422	1314	E
	0WC + 1UC	4325	3200	1,650/1,800	2000	1486	1064	422	1714	E
	0WC + 1UM	4325	3490	1,650/1,800	2250	1486	1064	422	2004	E
	0WC + 1UB	4325	3550	1,650/1,800	2250	1486	1064	422	2064	E
	0WC + 1UV	4325	3880	1800	2430	1505	1064	441	2375	E
	0WF + 1UX	4325	3,500	1,850/2,000	2300	1719	1144	575	1781	Z/S
	0WF + 1UK	4325	4000	1,850/2,000	3200	1719	1144	575	2281	Z/S
	0WF + 1UY	4325	4250	1,850/2,000	3200	1719	1144	575	2531	Z/S
	0WF + 1UZ	4325	4490	1,850/2,000	3200	1719	1144	575	2771	Z/S
	0WF + 1UW	4325	4600	1,850/2,000	3200	1719	1144	575	2881	Z/S
	0WF + 1UP	4325	4850	1,850/2,000	3,500	1719	1144	575	3131	Z
	0WF	4325	5000	1,850/2,000	3,500	1719	1144	575	3281	Z

Version dated: May 2014 For explanations of the remarks, see the introduction to 10.4 “Weight tables”

10.4.11 Crafter platform van with double cab (4 cylinder TDI) EUVI (SCR)

Model [1]	PR no.[2] (GVWR)	Wheel-base [mm]	Perm. weights [kg]			Unl. weight incl. driver [kg]			Max. payload [kg]	Tyres[3]
			Total weight	Front axle load	Rear axle load	Total weight	Front axle load	Rear axle load		
Double cab Flatbed (SWB)	0WC	3250	3,500	1,650/1,800	2250	2356	1280	765	1144	E
	0WC + 1UC	3250	3200	1,650/1,800	2000	2356	1280	765	844	E
	0WC + 1UM	3250	3490	1,650/1,800	2250	2356	1280	765	1134	E
	0WC + 1UB	3250	3550	1,650/1,800	2250	2356	1280	765	1194	E
	0WC + 1UV	3250	3880	1800	2430	2356	1280	784	1797	E
Double cab Flatbed (MWB)	0WC	3665	3,500	1,650/1,800	2250	2356	1323	776	1144	E
	0WC + 1UC	3665	3200	1,650/1,800	2000	2356	1323	776	844	E
	0WC + 1UM	3665	3490	1,650/1,800	2250	2356	1323	776	1134	E
	0WC + 1UB	3665	3550	1,650/1,800	2250	2356	1323	776	1194	E
	0WC + 1UV	3665	3880	1800	2430	2356	1323	795	1743	E
	0WF + 1UX	3665	3,500	1,850/2,000	2300	2383	1416	967	1117	Z/S
	0WF + 1UK	3665	4000	1,850/2,000	3200	2383	1416	967	1617	Z/S
	0WF + 1UY	3665	4250	1,850/2,000	3200	2383	1416	967	1867	Z/S
	0WF + 1UZ	3665	4490	1,850/2,000	3200	2383	1416	967	2107	Z/S
Double cab Flatbed (MWB)	0WF + 1UW	3665	4600	1,850/2,000	3200	2383	1416	967	2217	Z/S
	0WF + 1UP	3665	4850	1,850/2,000	3,500	2383	1416	967	2467	Z
	0WF	3665	5000	1,850/2,000	3,500	2383	1416	967	2617	Z

Date: May 2014. For explanations of the notes, see introduction to 10.4 "Weight tables"

Model [1]	PR no.[2] (GVWR)	Wheel-base [mm]	Perm. weights [kg]			Unl. weight incl. driver [kg]			Max. payload [kg]	Tyres[3]
			Total weight	Front axle load	Rear axle load	Total weight	Front axle load	Rear axle load		
Double cab Flatbed (LWB)	0WC	4325	3,500	1800	2250	2356	1280	765	1144	E
	0WC + 1UC	4325	3200	1800	2000	2356	1399	771	844	E
	0WC + 1UM	4325	3490	1800	2250	2356	1399	771	1134	E
	0WC + 1UB	4325	3550	1800	2250	2356	1399	771	1194	E
	0WC + 1UV	4325	3880	1800	2430	2356	1399	790	1672	E
	0WF + 1UX	4325	3,500	1,850/2,000	2300	2459	1517	942	1041	Z/S
	0WF + 1UK	4325	4000	1,850/2,000	3200	2459	1517	942	1541	Z/S
	0WF + 1UY	4325	4250	1,850/2,000	3200	2459	1517	942	1791	Z/S
	0WF + 1UZ	4325	4490	1,850/2,000	3200	2459	1517	942	2031	Z/S
	0WF + 1UW	4325	4600	1,850/2,000	3200	2459	1517	942	2141	Z/S
	0WF + 1UP	4325	4850	1,850/2,000	3,500	2459	1517	942	2391	Z
	0WF	4325	5000	1,850/2,000	3,500	2459	1517	942	2541	Z

Date: May 2014. For explanations of the notes, see introduction to 10.4 “Weight tables”

10.4.12 Crafter chassis with double cab (4 cylinder TDI) EUVI (SCR)

Model [1]	PR no.[2] (GVWR)	Wheel-base [mm]	Permitted weights [kg]			Kerb weight incl. driver [kg][4, 5]			Max. payload [kg]	Tyres[3]
			Total weight	Front axle load	Rear axle load	Total weight	Front axle load	Rear axle load		
Double cab Chassis (SWB)	0WC	3250	3,500	1,650/1,800	2250	1637	1085	552	1863	E
	0WC + 1UC	3250	3200	1,650/1,800	2000	1637	1085	552	1563	E
	0WC + 1UM	3250	3490	1,650/1,800	2250	1637	1085	552	1853	E
	0WC + 1UB	3250	3550	1,650/1,800	2250	1637	1085	552	1913	E
	0WC + 1UV	3250	3880	1800	2430	1656	1085	571	1955	E
Double cab Chassis (MWB)	0WC	3665	3,500	1,650/1,800	2250	1659	1127	532	1841	E
	0WC + 1UC	3665	3200	1,650/1,800	2000	1659	1127	532	1541	E
	0WC + 1UM	3665	3490	1,650/1,800	2250	1659	1127	532	1831	E
	0WC + 1UB	3665	3550	1,650/1,800	2250	1659	1127	532	1891	E
	0WC + 1UV	3665	3880	1800	2430	1678	1127	551	1933	E
	0WF + 1UX	3665	3,500	1,850/2,000	2300	2152	1421	731	1348	Z/S
	0WF + 1UK	3665	4000	1,850/2,000	3200	2152	1421	731	1848	Z/S
	0WF + 1UY	3665	4250	1,850/2,000	3200	2152	1421	731	2098	Z/S
	0WF + 1UZ	3665	4490	1,850/2,000	3200	2152	1421	731	2338	Z/S
Double cab Chassis (MWB)	0WF + 1UW	3665	4600	1,850/2,000	3200	2152	1421	731	2448	Z/S
	0WF + 1UP	3665	4850	1,850/2,000	3,500	2152	1421	731	2698	Z
	0WF	3665	5000	1,850/2,000	3,500	2152	1421	731	2848	Z

Date: May 2014. For explanations of the notes, see introduction to 10.4 "Weight tables"

Model [1]	PR no.[2] (GVWR)	Wheel-base [mm]	Permitted weights [kg]			Unl. weight incl. driver [kg]			Max. payload [kg]	Tyres[3]
			Total weight	Front axle load	Rear axle load	Total weight	Front axle load	Rear axle load		
Double cab Chassis (LWB)	0WC	4325	3,500	1800	2250	1687	1186	501	1813	E
	0WC + 1UC	4325	3200	1800	2000	1687	1186	501	1513	E
	0WC + 1UM	4325	3490	1800	2250	1687	1186	501	1803	E
	0WC + 1UB	4325	3550	1800	2250	1687	1186	501	1863	E
	0WC + 1UV	4325	3880	1800	2430	1706	1186	520	1905	E
	0WF + 1UX	4325	3,500	1,850/2,000	2300	2166	1508	658	1334	Z/S
	0WF + 1UK	4325	4000	1,850/2,000	3200	2166	1508	658	1834	Z/S
	0WF + 1UY	4325	4250	1,850/2,000	3200	2166	1508	658	2084	Z/S
	0WF + 1UZ	4325	4490	1,850/2,000	3200	2166	1508	658	2324	Z/S
	0WF + 1UW	4325	4600	1,850/2,000	3200	2166	1508	658	2434	Z/S
	0WF + 1UP	4325	4850	1,850/2,000	3,500	2166	1508	658	2684	Z
	0WF	4325	5000	1,850/2,000	3,500	2166	1508	658	2834	Z

Date: May 2014. For explanations of the notes, see introduction to 10.4 “Weight tables”

10.4.13 Crafter platform van (5 cylinder Blue TDI, Shiftmatic) EUV

Model [1]	PR no.[2] (GVWR)	Wheel-base [mm]	Permitted weights [kg]			Unl. weight incl. driver [kg]			Max. payload [kg]	Tyres[3]
			Total weight	Front axle load	Rear axle load	Total weight	Front axle load	Rear axle load		
Panel van (SWB)*	0WL	3250	3000	1650	1800	1987	1221	766	1013	E
	0WC	3250	3,500	1,650/1,800	2250	2000	1231	769	1500	E
	0WL + 1UN	3250	2800	1650	1650	1987	1221	766	813	E
	0WC + 1UU	3250	2800	1650	1650	2000	1231	769	800	E
	0WL + 1UL	3250	3025	1650	1800	1987	1221	766	1038	E
	0WC + 1UC	3250	3200	1,650/1,800	2000	2000	1231	769	1200	E
	0WC + 1UM	3250	3490	1,650/1,800	2250	2000	1231	769	1490	E
	0WC + 1UB	3250	3550	1,650/1,800	2250	2000	1231	769	1550	E
	0WC + 1UV	3250	3880	1800	2430	2019	1231	788	1861	E

Date: May 2014. For explanations of the notes, see introduction to 10.4 “Weight tables”

Model [1]	PR no.[2] (GVWR)	Wheel-base [mm]	Permitted weights [kg]			Unl. weight incl. driver [kg]			Max. payload [kg]	Tyres[3]
			Total weight	Front axle load	Rear axle load	Total weight	Front axle load	Rear axle load		
Panel van (MWB)	0WL	3665	3000	1650	1800	2055	1250	805	945	E
	0WC	3665	3,500	1,650/1,800	2250	2068	1260	808	1432	E
	0WL + 1UN	3665	2800	1650	1650	2055	1250	805	745	E
	0WC + 1UU	3665	2800	1650	1650	2068	1260	808	732	E
	0WL + 1UL	3665	3025	1650	1800	2055	1250	805	970	E
	0WC + 1UC	3665	3200	1,650/1,800	2000	2068	1260	808	1132	E
	0WC + 1UM	3665	3490	1,650/1,800	2250	2068	1260	808	1422	E
	0WC + 1UB	3665	3550	1,650/1,800	2250	2068	1260	808	1482	E
	0WC + 1UV	3665	3880	1800	2430	2087	1260	827	1793	E
	0WF + 1UX	3665	3,500	1,850/2,000	2300	2348	1355	993	1152	Z/S
	0WF + 1UK	3665	4000	1,850/2,000	3200	2348	1355	993	1652	Z/S
	0WF + 1UY	3665	4250	1,850/2,000	3200	2348	1355	993	1902	Z/S
	0WF + 1UZ	3665	4490	1,850/2,000	3200	2348	1355	993	2142	Z/S
	0WF + 1UW	3665	4600	1,850/2,000	3200	2348	1355	993	2252	Z/S
	0WF + 1UP	3665	4850	1,850/2,000	3,500	2348	1355	993	2502	Z
Panel van (MWB)	0WF	3665	5000	1,850/2,000	3,500	2348	1355	993	2652	Z

Date: May 2014. For explanations of the notes, see introduction to 10.4 “Weight tables”

Model [1]	PR no.[2] (GVWR)	Wheel-base [mm]	Permitted weights [kg]			Unl. weight incl. driver [kg]			Max. payload [kg]	Tyres[3]
			Total weight	Front axle load	Rear axle load	Total weight	Front axle load	Rear axle load		
Panel van (MWB) Medium-high roof	0WL	3665	3000	1650	1800	2091	1261	830	909	E
	0WC	3665	3,500	1,650/1,800	2250	2104	1271	833	1396	E
	0WL + 1UN	3665	2800	1650	1650	2091	1261	830	709	E
	0WC + 1UU	3665	2800	1650	1650	2104	1271	833	696	E
	0WL + 1UL	3665	3025	1650	1800	2091	1261	830	934	E
	0WC + 1UC	3665	3200	1,650/1,800	2000	2104	1271	833	1096	E
	0WC + 1UM	3665	3490	1,650/1,800	2250	2104	1271	833	1386	E
	0WC + 1UB	3665	3550	1,650/1,800	2250	2104	1271	833	1446	E
	0WC + 1UV	3665	3880	1800	2430	2123	1271	852	1757	E
	0WF + 1UX	3665	3,500	1,850/2,000	2300	2384	1366	1018	1116	Z/S
	0WF + 1UK	3665	4000	1,850/2,000	3200	2384	1366	1018	1616	Z/S
	0WF + 1UY	3665	4250	1,850/2,000	3200	2384	1366	1018	1866	Z/S
	0WF + 1UZ	3665	4490	1,850/2,000	3200	2384	1366	1018	2106	Z/S
	0WF + 1UW	3665	4600	1,850/2,000	3200	2384	1366	1018	2216	Z/S
Panel van (MWB) Medium-high roof	0WF + 1UP	3665	4850	1,850/2,000	3,500	2384	1366	1018	2466	Z
	0WF	3665	5000	1,850/2,000	3,500	2384	1366	1018	2616	Z

Version dated: May 2014 For explanations of the remarks, see the introduction to 10.4 “Weight tables”

Model[1]	PR no.[2] (GVWR)	Wheel-base [mm]	Permitted weights [kg]			Unl. weight incl. driver [kg]			Max. payload [kg]	Tyres[3]
			Total weight	Front axle load	Rear axle load	Total weight	Front axle load	Rear axle load		
Panel van (LWB) medium-high roof	0WC	4325	3,500	1,650/1,800	2250	2238	1313	925	1262	E
	0WC + 1UU	4325	2800	1650	1650	2238	1313	925	562	E
	0WC + 1UC	4325	3200	1,650/1,800	2000	2238	1313	925	962	E
	0WC + 1UM	4325	3490	1,650/1,800	2250	2238	1313	925	1252	E
	0WC + 1UB	4325	3550	1,650/1,800	2250	2238	1313	925	1312	E
	0WC + 1UV	4325	3880	1800	2430	2257	1313	944	1623	E
	0WF + 1UX	4325	3,500	1,850/2,000	2300	2550	1428	1122	950	Z/S
	0WF + 1UK	4325	4000	1,850/2,000	3200	2550	1428	1122	1450	Z/S
	0WF + 1UY	4325	4250	1,850/2,000	3200	2550	1428	1122	1,700	Z/S
	0WF + 1UZ	4325	4490	1,850/2,000	3200	2550	1428	1122	1940	Z/S
	0WF + 1UW	4325	4600	1,850/2,000	3200	2550	1428	1122	2050	Z/S
	0WF + 1UP	4325	4850	1,850/2,000	3,500	2550	1428	1122	2300	Z
	0WF	4325	5000	1,850/2,000	3,500	2550	1428	1122	2450	Z

Date: May 2014. For explanations of the notes, see introduction to 10.4 “Weight tables”

Model[1]	PR no.[2] (GVWR)	Wheel-base [mm]	Permitted weights [kg]			Unl. weight incl. driver [kg]			Max. payload [kg]	Tyres[3]
			Total weight	Front axle load	Rear axle load	Total weight	Front axle load	Rear axle load		
Panel van (LWB)* medium-high roof with overhang	0WC	4325	3,500	1,650/1,800	2250	2290	1304	986	1210	E
	0WC + 1UU	4325	2800	1650	1650	2290	1304	986	510	E
	0WC + 1UC	4325	3200	1,650/1,800	2000	2290	1304	986	910	E
	0WC + 1UM	4325	3490	1,650/1,800	2250	2290	1304	986	1200	E
	0WC + 1UB	4325	3550	1,650/1,800	2250	2290	1304	986	1260	E
	0WC + 1UV	4325	3880	1800	2430	2309	1304	1005	1571	E
	0WF + 1UX	4325	3,500	1,850/2,000	2300	2597	1424	1173	903	Z/S
	0WF + 1UK	4325	4000	1,850/2,000	3200	2597	1424	1173	1403	Z/S
	0WF + 1UY	4325	4250	1,850/2,000	3200	2597	1424	1173	1653	Z/S
	0WF + 1UZ	4325	4490	1,850/2,000	3200	2597	1424	1173	1893	Z/S
	0WF + 1UW	4325	4600	1,850/2,000	3200	2597	1424	1173	2003	Z/S
	0WF + 1UP	4325	4850	1,850/2,000	3,500	2597	1424	1173	2253	Z
	0WF	4325	5000	1,850/2,000	3,500	2597	1424	1173	2403	Z

Date: May 2014. For explanations of the notes, see introduction to 10.4 “Weight tables”

Model[1]	PR no.[2] (GVWR)	Wheel-base [mm]	Permitted weights [kg]			Unl. weight incl. driver [kg]			Max. payload [kg]	Tyres[3]
			Total weight	Front axle load	Rear axle load	Total weight	Front axle load	Rear axle load		
Panel van (MWB)* High roof	0WC	3665	3,500	1800	2250	2140	1282	858	1360	E
	0WC + 1UU	3665	2800	1650	1650	2140	1282	858	660	E
	0WC + 1UC	3665	3200	1,650/1,800	2000	2140	1282	858	1060	E
	0WC + 1UM	3665	3490	1,650/1,800	2250	2140	1282	858	1350	E
	0WC + 1UB	3665	3550	1,650/1,800	2250	2140	1282	858	1410	E
	0WC + 1UV	3665	3880	1800	2430	2159	1282	877	1721	E
	0WF + 1UX	3665	3,500	1,850/2,000	2300	2420	1377	1043	1080	Z/S
	0WF + 1UK	3665	4000	1,850/2,000	3200	2420	1377	1043	1580	Z/S
	0WF + 1UY	3665	4250	1,850/2,000	3200	2420	1377	1043	1830	Z/S
	0WF + 1UZ	3665	4490	1,850/2,000	3200	2420	1377	1043	2070	Z/S
	0WF + 1UW	3665	4600	1,850/2,000	3200	2420	1377	1043	2180	Z/S
	0WF + 1UP	3665	4850	1,850/2,000	3,500	2420	1377	1043	2430	Z
	0WF	3665	5000	1,850/2,000	3,500	2420	1377	1043	2580	Z

Date: May 2014. For explanations of the notes, see introduction to 10.4 “Weight tables”

Model[1]	PR no.[2] (GVWR)	Wheel-base [mm]	Permitted weights [kg]			Unl. weight incl. driver [kg]			Max. payload [kg]	Tyres[3]
			Total weight	Front axle load	Rear axle load	Total weight	Front axle load	Rear axle load		
Panel van (LWB) high roof	0WC	4325	3,500	1800	2250	2265	1321	944	1235	E
	0WC + 1UU	4325	2800	1650	1650	2265	1321	944	535	E
	0WC + 1UC	4325	3200	1650/	2000	2265	1321	944	935	E
	0WC + 1UB	4325	3550	1650/	2250	2265	1321	944	1285	E
	0WC + 1UV	4325	3880	1800	2430	2284	1321	963	1596	E
	0WF + 1UX	4325	3,500	1850/	2300	2577	1436	1141	923	Z/S
	0WF + 1UK	4325	4000	1850/	3200	2577	1436	1141	1423	Z/S
	0WF + 1UY	4325	4250	1850/	3200	2577	1436	1141	1673	Z/S
	0WF + 1UZ	4325	4490	1850/	3200	2577	1436	1141	1913	Z/S
	0WF + 1UW	4325	4600	1850/	3200	2577	1436	1141	2023	Z/S
	0WF + 1UP	4325	4850	1850/	3,500	2577	1436	1141	2273	Z
	0WF	4325	5000	1850/	3,500	2577	1436	1141	2423	Z

Date: May 2014. For explanations of the notes, see introduction to 10.4 “Weight tables”

Model [1]	PR no.[2] (GVWR)	Wheel-base [mm]	Perm. weights [kg]			Unl. weight incl. driver [kg]			Max. payload [kg]	Tyres[3]
			Total weight	Front axle load	Rear axle load	Total weight	Front axle load	Rear axle load		
Panel van (LWB) high roof with overhang	0WC	4325	3,500	1800	2250	2318	1310	1008	1182	E
	0WC + 1UC	4325	3200	1,650/1,800	2000	2318	1310	1008	882	E
	0WC + 1UB	4325	3550	1,650/1,800	2250	2318	1310	1008	1370	E
	0WC + 1UV	4325	3880	1800	2430	2337	1310	1027	1543	E
	0WF + 1UX	4325	3,500	1,850/2,000	2300	2625	1430	1195	875	Z/S
	0WF + 1UK	4325	4000	1,850/2,000	3200	2625	1430	1195	1375	Z/S
	0WF + 1UY	4325	4250	1,850/2,000	3200	2625	1430	1195	1625	Z/S
	0WF + 1UZ	4325	4490	1,850/2,000	3200	2625	1430	1195	1865	Z/S
	0WF + 1UW	4325	4600	1,850/2,000	3200	2625	1430	1195	1975	E
	0WF + 1UP	4325	4850	1,850/2,000	3,500	2625	1430	1195	2225	Z
	0WF	4325	5000	1,850/2,000	3,500	2625	1430	1195	2375	Z

Date: May 2014. For explanations of the notes, see introduction to 10.4 “Weight tables”

10.4.14 Crafter platform van (5 cylinder Blue TDI, Shiftmatic) EUV

Model [1]	PR no.[2] (GVWR)	Wheel-base [mm]	Permitted weights [kg]			Unl. weight incl. driver [kg]			Max. payload [kg]	Tyres[3]
			Total weight	Front axle load	Rear axle load	Total weight	Front axle load	Rear axle load		
Flatbed (SWB)	0WL	3250	3000	1650	1800	1939	1223	716	1061	E
	0WC	3250	3,500	1,650/1,800	2250	1952	1233	719	1548	E
	0WL + 1UN	3250	2800	1650	1650	1939	1223	716	861	E
	0WC + 1UU	3250	2800	1650	1650	1952	1233	719	848	E
	0WL + 1UL	3250	3025	1650	1800	1939	1223	716	1086	E
	0WC + 1UC	3250	3200	1,650/1,800	2000	1952	1233	719	1248	E
	0WC + 1UM	3250	3490	1,650/1,800	2250	1952	1233	719	1538	E
	0WC + 1UB	3250	3550	1,650/1,800	2250	1952	1233	719	1598	E
	0WC + 1UV	3250	3880	1800	2430	1971	1233	738	1909	E

Date: May 2014. For explanations of the notes, see introduction to 10.4 “Weight tables”

Model [1]	PR no.[2] (GVWR)	Wheel-base [mm]	Permitted weights [kg]			Unl. weight incl. driver [kg]			Max. payload [kg]	Tyres[3]
			Total weight	Front axle load	Rear axle load	Total weight	Front axle load	Rear axle load		
Flatbed (MWB)	0WL	3665	3000	1650	1800	1988	1253	735	1012	E
	0WC	3665	3,500	1,650/1,800	2250	2001	1263	738	1499	E
	0WL + 1UN	3665	2800	1650	1650	1988	1253	735	812	E
	0WC + 1UU	3665	2800	1650	1650	2001	1263	738	799	E
	0WL + 1UL	3665	3025	1650	1800	1988	1253	735	1037	E
	0WC + 1UC	3665	3200	1,650/1,800	2000	2001	1263	738	1199	E
	0WC + 1UM	3665	3490	1,650/1,800	2250	2001	1263	738	1489	E
	0WC + 1UB	3665	3550	1,650/1,800	2250	2001	1263	738	1549	E
	0WC + 1UV	3665	3880	1800	2430	2020	1263	757	1860	E
	0WF + 1UX	3665	3,500	1,850/2,000	2300	2297	1332	965	1203	Z/S
	0WF + 1UK	3665	4000	1,850/2,000	3200	2297	1332	965	1703	Z/S
	0WF + 1UY	3665	4250	1,850/2,000	3200	2297	1332	965	1953	Z/S
	0WF + 1UZ	3665	4490	1,850/2,000	3200	2297	1332	965	2193	Z/S
	0WF + 1UW	3665	4600	1,850/2,000	3200	2297	1332	965	2303	Z/S
	0WF + 1UP	3665	4850	1,850/2,000	3,500	2297	1332	965	2553	Z
Flatbed (MWB)	0WF	3665	5000	1,850/2,000	3,500	2297	1332	965	2703	Z

Version dated: May 2014 For explanations of the remarks, see the introduction to 10.4 “Weight tables”

Model [1]	PR no.[2] (GVWR)	Wheel-base [mm]	Permitted weights [kg]			Unl. weight incl. driver [kg]			Max. payload [kg]	Tyres[3]
			Total weight	Front axle load	Rear axle load	Total weight	Front axle load	Rear axle load		
Flatbed (LWB)	0WC	4325	3,500	1,650/1,800	2250	2080	1326	754	1420	E
	0WC + 1UU	4325	2800	1650	1650	2080	1326	754	720	E
	0WC + 1UC	4325	3200	1,650/1,800	2000	2080	1326	754	1120	E
	0WC + 1UM	4325	3490	1,650/1,800	2250	2080	1326	754	1410	E
	0WC + 1UB	4325	3550	1,650/1,800	2250	2080	1326	754	1470	E
	0WC + 1UV	4325	3880	1800	2430	2099	1326	773	1781	E
	0WF + 1UX	4325	3,500	1,850/2,000	2300	2381	1415	966	1119	Z/S
	0WF + 1UK	4325	4000	1,850/2,000	3200	2381	1415	966	1619	Z/S
	0WF + 1UY	4325	4250	1,850/2,000	3200	2381	1415	966	1869	Z/S
	0WF + 1UZ	4325	4490	1,850/2,000	3200	2381	1415	966	2109	Z/S
	0WF + 1UW	4325	4600	1,850/2,000	3200	2381	1415	966	2219	Z/S
	0WF + 1UP	4325	4850	1,850/2,000	3,500	2381	1415	966	2469	Z
	0WF	4325	5000	1,850/2,000	3,500	2381	1415	966	2619	Z

Date: May 2014. For explanations of the notes, see introduction to 10.4 “Weight tables”

10.4.15 Chassis with single cab (5 cylinder Blue TDI, Shiftmatic) EUV

Model [1]	PR no.[2] (GVWR)	Wheel-base [mm]	Permitted weights [kg]			Unl. weight incl. driver [kg]			Max. payload [kg]	Tyres[3]
			Total weight	Front axle load	Rear axle load	Total weight	Front axle load	Rear axle load		
Chassis with SC (SWB)	0WL	3250	3000	1650	1800	1741	1204	537	1259	E
	0WC	3250	3,500	1,650/1,800	2250	1754	1214	540	1746	E
	0WL + 1UN	3250	2800	1650	1650	1741	1204	537	1059	E
	0WC + 1UU	3250	2800	1650	1650	1754	1214	540	1046	E
	0WL + 1UL	3250	3025	1650	1800	1741	1204	537	1284	E
	0WC + 1UC	3250	3200	1,650/1,800	2000	1754	1214	540	1446	E
	0WC + 1UM	3250	3490	1,650/1,800	2250	1754	1214	540	1736	E
	0WC + 1UB	3250	3550	1,650/1,800	2250	1754	1214	540	1796	E
	0WC + 1UV	3250	3880	1800	2430	1773	1214	559	2107	E

Date: May 2014. For explanations of the notes, see introduction to 10.4 “Weight tables”

Model [1]	PR no.[2] (GVWR)	Wheel-base [mm]	Permitted weights [kg]			Unl. weight incl. driver [kg]			Max. payload [kg]	Tyres[3]
			Total weight	Front axle load	Rear axle load	Total weight	Front axle load	Rear axle load		
Chassis with SC (MWB)	0WL	3665	3000	1650	1800	1758	1229	529	1242	E
	0WC	3665	3,500	1,650/1,800	2250	1771	1239	532	1729	E
	0WL + 1UN	3665	2800	1650	1650	1758	1229	529	1042	E
	0WC + 1UU	3665	2800	1650	1650	1771	1239	532	1029	E
	0WL + 1UL	3665	3025	1650	1800	1758	1229	529	1267	E
	0WC + 1UC	3665	3200	1,650/1,800	2000	1771	1239	532	1429	E
	0WC + 1UM	3665	3490	1,650/1,800	2250	1771	1239	532	1719	E
	0WC + 1UB	3665	3550	1,650/1,800	2250	1771	1239	532	1779	E
	0WC + 1UV	3665	3880	1800	2430	1790	1239	551	2090	E
	0WF + 1UX	3665	3,500	1,850/2,000	2300	1996	1309	687	1504	Z/S
	0WF + 1UK	3665	4000	1,850/2,000	3200	1996	1309	687	2004	Z/S
	0WF + 1UY	3665	4250	1,850/2,000	3200	1996	1309	687	2254	Z/S
	0WF + 1UZ	3665	4490	1,850/2,000	3200	1996	1309	687	2494	Z/S
	0WF + 1UW	3665	4600	1,850/2,000	3200	1996	1309	687	2604	Z/S
	0WF + 1UP	3665	4850	1,850/2,000	3,500	1996	1309	687	2854	Z
Flatbed (MWB)	0WF	3665	5000	1,850/2,000	3,500	1996	1309	687	3004	Z

Date: May 2014. For explanations of the notes, see introduction to 10.4 "Weight tables"

Model [1]	PR no.[2] (GVWR)	Wheel-base [mm]	Permitted weights [kg]			Unl. weight incl. driver [kg]			Max. payload [kg]	Tyres[3]
			Total weight	Front axle load	Rear axle load	Total weight	Front axle load	Rear axle load		
Chassis with SC (LWB)	0WC	4325	3,500	1,650/1,800	2250	1801	1288	513	1699	E
	0WC + 1UU	4325	2800	1650	1650	1801	1288	513	999	E
	0WC + 1UC	4325	3200	1,650/1,800	2000	1801	1288	513	1399	E
	0WC + 1UM	4325	3490	1,650/1,800	2250	1801	1288	513	1689	E
	0WC + 1UB	4325	3550	1,650/1,800	2250	1801	1288	513	1749	E
	0WC + 1UV	4325	3880	1800	2430	1820	1288	532	2060	E
	0WF + 1UX	4325	3,500	1,850/2,000	2300	2034	1368	666	1466	Z/S
	0WF + 1UK	4325	4000	1,850/2,000	3200	2034	1368	666	1966	Z/S
	0WF + 1UY	4325	4250	1,850/2,000	3200	2034	1368	666	2216	Z/S
	0WF + 1UZ	4325	4490	1,850/2,000	3200	2034	1368	666	2456	Z/S
	0WF + 1UW	4325	4600	1,850/2,000	3200	2034	1368	666	2566	Z/S
	0WF + 1UP	4325	4850	1,850/2,000	3,500	2034	1368	666	2816	Z
	0WF	4325	5000	1,850/2,000	3,500	2034	1368	666	2966	Z

Date: May 2014. For explanations of the notes, see introduction to 10.4 “Weight tables”

10.4.16 Crafter platform van with double cab (5 cylinder Blue TDI, Shiftmatic) EUV

Model [1]	PR no.[2] (GVWR)	Wheel-base [mm]	Permitted weights [kg]			Unl. weight incl. driver [kg]			Max. payload [kg]	Tyres[3]
			Total weight	Front axle load	Rear axle load	Total weight	Front axle load	Rear axle load		
Double cab Flatbed (SWB)	0WL	3250	3000	1650	1800	2097	1297	800	903	E
	0WC	3250	3,500	1,650/1,800	2250	2110	1307	803	1390	E
	0WL + 1UN	3250	2800	1650	1650	2097	1297	800	703	E
	0WC + 1UU	3250	2800	1650	1650	2110	1307	803	690	E
	0WL + 1UL	3250	3025	1650	1800	2097	1297	800	928	E
	0WC + 1UC	3250	3200	1,650/1,800	2000	2110	1307	803	1090	E
	0WC + 1UM	3250	3490	1,650/1,800	2250	2110	1307	803	1380	E
	0WC + 1UB	3250	3550	1,650/1,800	2250	2110	1307	803	1440	E
	0WC + 1UV	3250	3880	1800	2430	2129	1307	822	1751	E

Date: May 2014. For explanations of the notes, see introduction to 10.4 “Weight tables”

Model [1]	PR no.[2] (GVWR)	Wheel-base [mm]	Permitted weights [kg]			Unl. weight incl. driver [kg]			Max. payload [kg]	Tyres[3]
			Total weight	Front axle load	Rear axle load	Total weight	Front axle load	Rear axle load		
Double cab Flatbed (MWB)	0WL	3665	3000	1650	1800	2151	1339	812	849	E
	0WC	3665	3,500	1,650/1,800	2250	2164	1349	815	1336	E
	0WL + 1UN	3665	2800	1650	1650	2151	1339	812	649	E
	0WC + 1UU	3665	2800	1650	1650	2164	1349	815	636	E
	0WL + 1UL	3665	3025	1650	1800	2151	1339	812	874	E
	0WC + 1UC	3665	3200	1,650/1,800	2000	2164	1349	815	1036	E
	0WC + 1UM	3665	3490	1,650/1,800	2250	2164	1349	815	1326	E
	0WC + 1UB	3665	3550	1,650/1,800	2250	2164	1349	815	1386	E
	0WC + 1UV	3665	3880	1800	2430	2183	1349	834	1697	E
	0WF + 1UX	3665	3,500	1,850/2,000	2300	2448	1442	1006	1052	Z/S
	0WF + 1UK	3665	4000	1,850/2,000	3200	2448	1442	1006	1552	Z/S
	0WF + 1UY	3665	4250	1,850/2,000	3200	2448	1442	1006	1802	Z/S
	0WF + 1UZ	3665	4490	1,850/2,000	3200	2448	1442	1006	2042	Z/S
	0WF + 1UW	3665	4600	1,850/2,000	3200	2448	1442	1006	2152	Z/S
	0WF + 1UP	3665	4850	1,850/2,000	3,500	2448	1442	1006	2402	Z
Double cab Flatbed	0WF	3665	5000	1,850/2,000	3,500	2448	1442	1006	2552	Z

Date: May 2014. For explanations of the notes, see introduction to 10.4 “Weight tables”

Model [1]	PR no.[2] (GVWR)	Wheel-base [mm]	Permitted weights [kg]			Unl. weight incl. driver [kg]			Max. payload [kg]	Tyres[3]
			Total weight	Front axle load	Rear axle load	Total weight	Front axle load	Rear axle load		
Double cab Flatbed (LWB)	0WC	4325	3,500	1800	2250	2235	1423	812	1265	E
	0WC + 1UC	4325	3200	1800	2000	2235	1423	812	965	E
	0WC + 1UM	4325	3490	1800	2250	2235	1423	812	1255	E
	0WC + 1UB	4325	3550	1800	2250	2235	1423	812	1315	E
	0WC + 1UV	4325	3880	1800	2430	2254	1423	831	1626	E
	0WF + 1UX	4325	3,500	1,850/2,000	2300	2524	1541	983	976	Z/S
	0WF + 1UK	4325	4000	1,850/2,000	3200	2524	1541	983	1476	Z/S
	0WF + 1UY	4325	4250	1,850/2,000	3200	2524	1541	983	1726	Z/S
	0WF + 1UZ	4325	4490	1,850/2,000	3200	2524	1541	983	1966	Z/S
	0WF + 1UW	4325	4600	1,850/2,000	3200	2524	1541	983	2076	Z/S
	0WF + 1UP	4325	4850	1,850/2,000	3,500	2524	1541	983	2326	Z
	0WF	4325	5000	1,850/2,000	3,500	2524	1541	983	2476	Z

Date: May 2014. For explanations of the notes, see introduction to 10.4 “Weight tables”

10.5 Dimensional drawings

Please refer to our dimensional drawings for the dimensions of the Crafter.
They are available for download in DXF, TIFF and PDF format at the body builder portal of Volkswagen AG.

Information

Current build dimension drawings are available for download from the body builder portal of Volkswagen AG under the "Technical drawings" menu option.

10.6 Diagrams (foil templates)

To help you create diagrams, you can download the vehicle views of all Crafter derivatives at the body builder portal of Volkswagen AG.

Information

Current diagrams are available for download from the body builder portal of Volkswagen AG under the "Foil templates" menu option.

10.7 CAD models

On request, body builders can receive 3D data models in the formats CATIA V.5 / STEP and JT for design purposes.

Information

The available 3-D data can be found on the body builder portal of Volkswagen AG under the “CAD data”* menu option.

* Registration is required!

Body builder guidelines The Crafter

Body builder guidelines
Subject to change without notice
Edition May 2016
Internet:
www.volkswagen-nutzfahrzeuge.de
www.umbauportal.de
www.bb-database.com

Consulting for body builders in Germany is available from the listed address.

Volkswagen Commercial Vehicles

Brieffach 2873
Postfach 21 05 80
D-30405 Hannover
Fax. +49 (0)511/798-8500